HBL

VentPro

Next Generation Ni-Cd Valve Regulated Pocket Plate Batteries

Introduction:

HBL with its global experience in Ni-Cd batteries has pioneered the development of next generation Nickel Cadmium Valve Regulated Pocket Plate Batteries - VentPro

This Ultra-low maintenance version provided with upgraded performance parameters replaces VRPP - "first generation" Ni-Cd Valve Regulated Pocket Plate batteries

VentPro range is designed to comply with IEC 62259 and certified by Intertek

VentPro ranges offer a recombination gas efficiency of more than 95%. No water additions are required in normal use

Available in a choice of plate types - designed to specific application requirements

VentPro range is offered in medium discharge HVM and long discharge HVL types

Construction

The construction of VentPro is based on robust pocket plate technology by introducing special features to bring the water topping requirement to zero when operated as per recommended guidelines and needs only minimal preventive maintenance.

The active materials are encapsulated between specially designed folded steel strips, which are perforated on both sides. This design increases the effective surface area and makes the battery performance more efficient. VentPro batteries use a special separator system that improves the Gas Recombination Efficiency (GRE) and significantly reduces the water loss in the batteries. The unique design of the separator system along with KOH electrolyte ensures that the GRE of VentPro batteries exceed the IEC requirements for partial recombination type Ni-Cd batteries.

The VentPro batteries come in tough, shock resistant, fusion welded polypropylene containers and lids. A unique flame arresting, self-resealing low-pressure vent cap in the batteries releases any excess gases inside the cell.

VentPro batteries are supplied in filled condition (either charged or discharged) with inter-cell connectors, cable connectors, associated hardware and accessories that are required for normal operation and maintenance. Powder coated Mild Steel racks to house the batteries can be provided as an option.

Cut-view of cell:

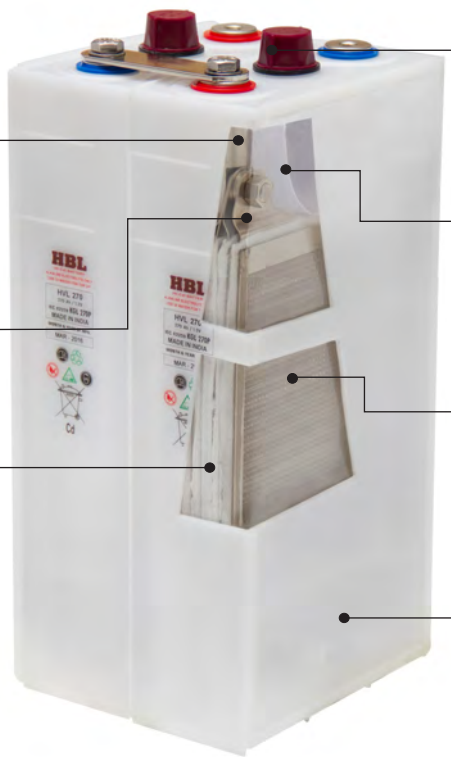

Self-resealing Low Pressure Vent Cap
(Releases any excess gases inside the cell)

Terminal Arrangement
Nickel-plated components (tab, stud, nut, post) provide excellent electrical conductivity

Splash Guard
Prevents electrolyte splashing and possible short-circuit caused by external objects accidentally falling into the cell

Plate Groups
Bolted construction under controlled torque conditions to withstand severe vibrations

Pocket Plate
Made of double perforated steel strips, encapsulating the active materials

Special Polypropylene Fibrous Separator
(Facilitates recombination)

Translucent Polypropylene Container
Fusion welded to lids, makes the cell mechanically sturdy and facilitates visual inspection of electrolyte level

Benefits

- Ultra-low maintenance version - No water additions required when operated under recommended conditions
- Excellent charge acceptance – More than 90% capacity available when charged at 1.42V for 15 hours @ 0.1C_5 A
- Improved discharge performance
- Exceptional gas recombination efficiency (>95%), better than IEC specified requirements.
- Long battery life – 20years+ at 20 deg C for standby float applications
- Better performance even at low temperatures (<20 deg C)
- Wide range of capacities, eliminates need for parallel strings
- Almost double the number of intermediate models as compared to leading competitors, resulting in the most optimal battery selection
- Best TCO (Total Cost of Ownership) for demanding application needs
- Available in two cell types – Medium Discharge (HVM) & Long Discharge (HVL)
- Built on rugged Ni-Cd Pocket Plate technology, no risk of sudden death failure

Capacity Range

Medium Discharge - HVM:

- For medium/short discharge applications, up to 3 hours backup time requirements
- 7 Ah to 1340 Ah
- 63 standard cell models to choose from

Long Discharge - HVL:

- For long discharge applications, with more than 3 hours backup time requirements
- 15 Ah to 1680 Ah
- 66 standard cell models to choose from

Applications

VentPro range batteries are specially designed for Industrial markets considering the reliability, cost-optimization and ultra-low maintenance requirements for the following applications and segments:

- Oil and gas
- Utilities
- Switching substations
- Emergency lighting
- UPS
- Fire alarm systems
- Signaling

Battery Charging

Following are recommended charge conditions :

Commissioning charge:

- Constant current charge of 20 hours at 0.1 C_5 A (10 amps for 100 Ah battery)

Charging in Operation:

The recommended charging voltages for continuous parallel operation, with occasional battery discharges:

Two Level Charging:

- Float level: 1.39 to 1.42 V/cell
- Boost level: 1.45 V/cell

Single Level Charging:

- 1.42 V/cell

For ensuring best performance & no water top-up, the batteries should be operated as per HBL recommended operating conditions (from -20 to +40 deg. C at 1.42 V/cell with temperature compensation).

Charge Acceptance:

Available capacity after constant voltage charge
Available charge current 0.1C_5A &.0.2C_5A for HVM type cell

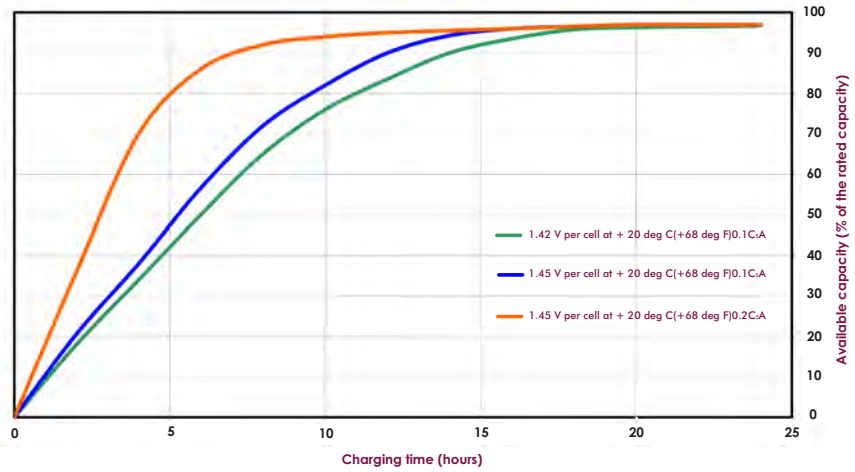

Available capacity after constant voltage charge
Available charge current 0.1C_5A &.0.2C_5A for HVL type cell

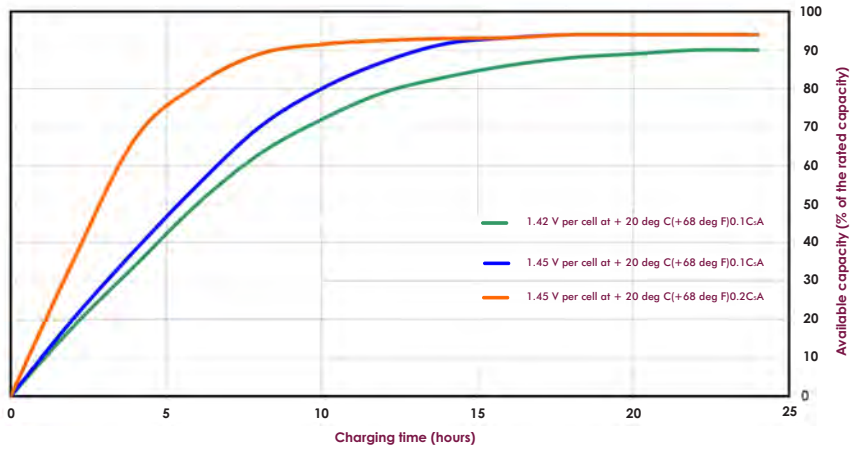

Refer Operation & Maintenance manual for maximising the performance of VentPro battery in various operating conditions

VentPro Next Generation

Cell dimensions HVM range

Cell type	Capacity (C_5 Ah)	Cell dimensions in mm						Approx. weight per cell in kg	Cell connection bolt size	Container size reference
		Height	Width	Length per block						
				1.2V L(1)	2.4V L(2)	3.6V L(3)	4.8V L(4)			
HVM 7	7	264	123		69	100	131	1.30	M6	B21-1
HVM 12	12							1.50		
HVM 16	16							1.60		
HVM 20	20	264	123		79	115	151	1.70	M6	B22-1
HVM 24	24							1.92		
HVM 28	28	264	123		103	151	198	2.50	M6	B23-1
HVM 32	32							2.70		
HVM 36	36							2.90		
HVM 40	40	264	123		127	187	246	3.30	M6	B24-1
HVM 45	45							3.60		
HVM 57	57	405	195		79	115	156	4.50	M10	B45-1
HVM 65	65							4.70		
HVM 75	75							5.00		
HVM 90	90	405	195		94	137	186	5.60	M10	B44-1
HVM 100	100							6.30		
HVM 110	110	405	195		115	169	228	7.20	M10	B42A-1
HVM 125	125							7.60		
HVM 138	138	405	195		127	187	252	8.20	M10	B42-1
HVM 150	150							8.40		
HVM 160	160	405	195		159	232	304	9.50	M10	B41B-1
HVM 170	170							9.90		
HVM 180	180	405	195		183	268	352	10.9	M10	B41-1
HVM 185	185							11.2		
HVM 195	195							11.5		
HVM 208	208							11.8		
HVM 220	220							12.0		
HVM 245	245	405	195	120	228	336		15.2	2xM10	B42A-2
HVM 250	250	405	195	132	252	372		16.1	2xM10	B42-2
HVM 270	270							16.4		
HVM 295	295							16.8		
HVM 300	300							16.9		
HVM 320	320	405	195	159	304			18.8	2xM10	B41B-2
HVM 345	345							19.8		
HVM 355	355	405	195	183				21.8	2xM10	B41-2
HVM 370	370							22.4		
HVM 395	395							23.0		
HVM 415	415							22.4		
HVM 420	420							23.5		
HVM 445	445							24.0		
HVM 465	465	405	195	232				29.0	3xM10	B41B-3
HVM 490	490							29.0		
HVM 510	510							29.7		
HVM 540	540	405	195	268				32.4	3xM10	B41-3
HVM 565	565							34.0		
HVM 590	590							34.8		
HVM 600	600							34.4		
HVM 615	615							35.0		
HVM 640	640							35.6		
HVM 660	660							36.0		
HVM 690	690	405	195	304				39.6	4xM10	B41B-4
HVM 715	715	405	195	352				43.2	4xM10	B41-4
HVM 740	740							44.8		
HVM 785	785							46.0		
HVM 810	810							46.6		
HVM 835	835							47.2		
HVM 860	860							47.6		
HVM 885	885							48.0		
HVM 915	915	405	195	437				55.4	5xM10	B41-5
HVM 935	935							56.0		
HVM 960	960							57.2		
HVM 985	985							57.5		
HVM 1030	1030							58.7		
HVM 1080	1080							59.7		
HVM 1130	1130	405	195	522				67.0	6xM10	B41-6
HVM 1180	1180							69.0		
HVM 1230	1230							70.0		
HVM 1280	1280							71.5		
HVM 1330	1330							72.0		
HVM 1340	1340							72.5		

Performance data of HVM range in Amperes

After long term float charge of fully charged cells at +20°C ±5°C (+68°F ± 9°F)

Final Cell Voltage: 1.14 V

Cell Type	C_5 Ah	Hours							Minutes					Seconds			
		10	8	5	3	2	1.5	1	30	20	15	10	5	60	30	5	1
HVM 7	7	0.70	0.86	1.34	2.08	2.63	3.01	3.72	4.69	5.35	5.74	6.43	7.44	9.07	10.0	12.5	13.6
HVM 12	12	1.19	1.48	2.30	3.57	4.51	5.15	6.38	8.04	9.18	9.84	11.0	12.8	15.6	17.2	21.4	23.3
HVM 16	16	1.59	1.97	3.06	4.76	6.02	6.87	8.51	10.7	12.2	13.1	14.7	17.0	20.7	23.0	28.5	31.0
HVM 20	20	1.99	2.47	3.83	5.95	7.52	8.59	10.6	13.4	15.3	16.4	18.4	21.3	25.9	28.7	35.7	38.8
HVM 24	24	2.39	2.96	4.59	7.14	9.03	10.3	12.8	16.1	18.4	19.7	22.0	25.5	31.1	34.5	42.8	46.5
HVM 28	28	2.79	3.46	5.36	8.34	10.5	12.0	14.9	18.8	21.4	23.0	25.7	29.8	36.3	40.2	49.9	54.3
HVM 32	32	3.19	3.95	6.13	9.53	12.0	13.7	17.0	21.4	24.5	26.2	29.4	34.0	41.5	45.9	57.1	62.0
HVM 36	36	3.58	4.44	6.89	10.7	13.5	15.5	19.1	24.1	27.5	29.5	33.0	38.3	46.7	51.7	64.2	69.8
HVM 40	40	3.98	4.94	7.66	11.9	15.0	17.2	21.3	26.8	30.6	32.8	36.7	42.5	51.8	57.4	71.4	77.5
HVM 45	45	4.48	5.55	8.61	13.4	16.9	19.3	23.9	30.1	34.4	36.9	41.3	47.8	58.3	64.6	80.3	87.2
HVM 57	57	5.60	6.92	10.7	17.0	22.2	25.6	29.6	37.1	41.0	43.3	47.2	54.1	61.6	66.5	76.3	80.6
HVM 65	65	6.38	7.89	12.2	19.4	25.3	29.2	33.8	42.3	46.8	49.4	53.8	61.7	70.2	75.8	87.0	91.9
HVM 75	75	7.37	9.10	14.1	22.4	29.2	33.7	39.0	48.8	54.0	57.0	62.1	71.2	81.0	87.5	100	106
HVM 90	90	8.84	10.9	16.9	26.8	35.0	40.4	46.8	58.5	64.8	68.4	74.5	85.5	97.2	105	121	127
HVM 100	100	9.82	12.1	18.8	29.8	38.9	44.9	52.0	65.0	72.0	76.0	82.8	94.9	108	117	134	141
HVM 110	110	10.8	13.4	20.7	32.8	42.8	49.4	57.2	71.5	79.2	83.6	91.1	104	119	128	147	155
HVM 125	125	12.3	15.2	23.5	37.3	48.6	56.1	65.0	81.3	90.0	95.0	104	119	135	146	167	177
HVM 138	138	13.6	16.7	26.0	41.2	53.7	61.9	71.8	89.8	99.4	105	114	131	149	161	185	195
HVM 150	150	14.7	18.2	28.2	44.7	58.3	67.3	78.0	97.6	108	114	124	142	162	175	201	212
HVM 160	160	15.7	19.4	30.1	47.7	62.2	71.8	83.2	104	115	122	132	152	173	187	214	226
HVM 170	170	16.7	20.6	32.0	50.7	66.1	76.3	88.4	111	122	129	141	161	184	198	228	240
HVM 180	180	17.7	21.8	33.9	53.7	70.0	80.8	93.6	117	130	137	149	171	194	210	241	254
HVM 185	185	18.2	22.5	34.8	55.2	72.0	83.0	96.2	120	133	141	153	176	200	216	248	261
HVM 195	195	19.1	23.7	36.7	58.2	75.9	87.5	101	127	140	148	161	185	211	227	261	276
HVM 208	208	20.4	25.2	39.1	62.0	80.9	93.3	108	135	150	158	172	197	225	243	279	294
HVM 220	220	21.6	26.7	41.4	65.6	85.6	98.7	114	143	158	167	182	209	238	257	295	311
HVM 245	245	24.1	29.7	46.1	73.1	95.3	110	127	159	176	186	203	233	265	286	328	346
HVM 250	250	24.6	30.3	47.0	74.6	97.2	112	130	163	180	190	207	237	270	292	335	353
HVM 270	270	26.5	32.8	50.8	80.5	105	121	140	176	194	205	224	256	292	315	362	382
HVM 295	295	29.0	35.8	55.5	88.0	115	132	153	192	212	224	244	280	319	344	395	417
HVM 300	300	29.5	36.4	56.4	89.5	117	135	156	195	216	228	248	285	324	350	402	424
HVM 320	320	31.4	38.8	60.2	95.4	124	144	166	208	230	243	265	304	346	373	428	452
HVM 345	345	33.9	41.9	64.9	103	134	155	179	224	248	262	286	328	373	402	462	488
HVM 355	355	34.9	43.1	66.8	106	138	159	185	231	256	270	294	337	384	414	475	502
HVM 370	370	36.3	44.9	69.6	110	144	166	192	241	266	281	306	351	400	432	495	523
HVM 395	395	38.8	47.9	74.3	118	154	177	205	257	284	300	327	375	427	461	529	558
HVM 415	415	40.8	50.4	78.1	124	161	186	216	270	299	315	344	394	448	484	556	587
HVM 420	420	41.2	51.0	79.0	125	163	188	218	273	302	319	348	399	454	490	562	594
HVM 445	445	43.7	54.0	83.7	133	173	200	231	289	320	338	369	423	481	519	596	629
HVM 465	465	45.7	56.4	87.5	139	181	209	242	302	335	353	385	442	502	542	623	657

Performance data of HVM range in Amperes

After long term float charge of fully charged cells at +20°C ±5°C (+68°F ± 9°F)

Final Cell Voltage: 1.14 V

Cell Type	C_5 Ah	Hours							Minutes					Seconds			
		10	8	5	3	2	1.5	1	30	20	15	10	5	60	30	5	1
HVM 490	490	48.1	59.5	92.2	146	191	220	255	319	353	372	406	465	529	572	656	693
HVM 510	510	50.1	61.9	95.9	152	198	229	265	332	367	387	422	484	551	595	683	721
HVM 540	540	53.0	65.5	102	161	210	242	281	351	389	410	447	513	583	630	723	763
HVM 565	565	55.5	68.6	106	168	220	254	294	367	407	429	468	536	610	659	757	799
HVM 590	590	57.9	71.6	111	176	230	265	307	384	425	448	489	560	637	688	790	834
HVM 600	600	58.9	72.8	113	179	233	269	312	390	432	456	497	570	648	700	803	848
HVM 615	615	60.4	74.6	116	183	239	276	320	400	443	467	509	584	664	717	823	869
HVM 640	640	62.8	77.7	120	191	249	287	333	416	461	486	530	608	692	747	857	904
HVM 660	660	64.8	80.1	124	197	257	296	343	429	475	501	547	627	713	770	884	933
HVM 690	690	67.8	83.7	130	206	268	310	359	449	497	524	571	655	746	805	924	975
HVM 715	715	70.2	86.8	134	213	278	321	372	465	515	543	592	679	773	834	957	1010
HVM 740	740	72.7	89.8	139	221	288	332	385	481	533	562	613	703	800	863	991	1046
HVM 785	785	77.1	95.3	148	234	305	352	408	511	565	596	650	745	848	916	1051	1109
HVM 810	810	79.5	98.3	152	242	315	363	421	527	583	615	671	769	875	945	1085	1145
HVM 835	835	82.0	101	157	249	325	375	434	543	601	634	691	793	902	974	1118	1180
HVM 860	860	84.5	104	162	256	335	386	447	559	619	653	712	817	929	1003	1151	1215
HVM 885	885	86.9	107	166	264	344	397	460	576	637	672	733	840	956	1032	1185	1251
HVM 915	915	89.9	111	172	273	356	411	476	595	659	695	758	869	989	1067	1225	1293
HVM 935	935	91.8	113	176	279	364	420	486	608	673	710	774	888	1010	1091	1252	1321
HVM 960	960	94.3	117	181	286	373	431	499	624	691	729	795	912	1037	1120	1285	1357
HVM 985	985	96.7	120	185	294	383	442	512	641	709	748	816	935	1064	1149	1319	1392
HVM 1030	1030	101	125	194	307	401	462	536	670	742	782	853	978	1113	1201	1379	1456
HVM 1080	1080	106	131	203	322	420	485	562	702	778	820	894	1025	1167	1260	1446	1526
HVM 1130	1130	111	137	213	337	440	507	588	735	814	858	936	1073	1221	1318	1513	1597
HVM 1180	1180	116	143	222	352	459	530	614	767	850	896	977	1120	1275	1376	1580	1668
HVM 1230	1230	121	149	231	367	478	552	640	800	886	934	1019	1168	1329	1435	1647	1738
HVM 1280	1280	126	155	241	382	498	574	666	832	922	972	1060	1215	1383	1493	1714	1809
HVM 1330	1330	131	161	250	397	517	597	692	865	958	1010	1101	1263	1437	1551	1781	1880
HVM 1340	1340	132	163	252	400	521	601	697	872	965	1018	1110	1272	1448	1563	1794	1894

Performance data of HVM range in Amperes

After long term float charge of fully charged cells at +20°C ±5°C (+68°F ± 9°F)

Final Cell Voltage: 1.10 V

Cell Type	C_5 Ah	Hours							Minutes					Seconds			
		10	8	5	3	2	1.5	1	30	20	15	10	5	60	30	5	1
HVM 7	7	0.72	0.89	1.38	2.24	3.09	3.76	4.77	6.02	6.92	7.47	8.21	9.61	11.4	12.5	15.3	17.2
HVM 12	12	1.23	1.53	2.37	3.84	5.30	6.45	8.18	10.3	11.9	12.8	14.1	16.5	19.5	21.4	26.2	29.4
HVM 16	16	1.64	2.03	3.16	5.12	7.07	8.60	10.9	13.8	15.8	17.1	18.8	22.0	26.0	28.6	35.0	39.2
HVM 20	20	2.05	2.54	3.96	6.40	8.83	10.7	13.6	17.2	19.8	21.3	23.5	27.5	32.5	35.7	43.7	49.0
HVM 24	24	2.46	3.05	4.75	7.68	10.6	12.9	16.4	20.6	23.7	25.6	28.2	33.0	39.0	42.9	52.5	58.8
HVM 28	28	2.87	3.56	5.54	8.96	12.4	15.0	19.1	24.1	27.7	29.9	32.9	38.4	45.4	50.0	61.2	68.6
HVM 32	32	3.28	4.07	6.33	10.2	14.1	17.2	21.8	27.5	31.6	34.1	37.6	43.9	51.9	57.2	70.0	78.4
HVM 36	36	3.69	4.58	7.12	11.5	15.9	19.3	24.5	31.0	35.6	38.4	42.2	49.4	58.4	64.3	78.7	88.2
HVM 40	40	4.10	5.09	7.91	12.8	17.7	21.5	27.3	34.4	39.6	42.7	46.9	54.9	64.9	71.5	87.5	98.0
HVM 45	45	4.61	5.72	8.90	14.4	19.9	24.2	30.7	38.7	44.5	48.0	52.8	61.8	73.0	80.4	98.4	110
HVM 57	57	5.75	7.13	11.2	18.0	25.4	31.1	38.8	47.7	52.1	55.9	60.5	68.2	77.2	83.1	94.8	101
HVM 65	65	6.56	8.13	12.7	20.5	28.9	35.4	44.2	54.3	59.5	63.7	69.0	77.8	88.0	94.8	108	115
HVM 75	75	7.57	9.38	14.7	23.7	33.4	40.9	51.0	62.7	68.6	73.5	79.7	89.7	102	109	125	133
HVM 90	90	9.08	11.3	17.6	28.4	40.1	49.1	61.2	75.2	82.3	88.2	95.6	108	122	131	150	159
HVM 100	100	10.1	12.5	19.6	31.5	44.5	54.5	68.0	83.6	91.5	98.0	106	120	135	146	166	177
HVM 110	110	11.1	13.8	21.6	34.7	49.0	60.0	74.9	92.0	101	108	117	132	149	160	183	194
HVM 125	125	12.6	15.6	24.5	39.4	55.6	68.2	85.1	105	114	123	133	150	169	182	208	221
HVM 138	138	13.9	17.3	27.0	43.5	61.4	75.3	93.9	115	126	135	147	165	187	201	229	244
HVM 150	150	15.1	18.8	29.4	47.3	66.8	81.8	102	125	137	147	159	179	203	219	249	265
HVM 160	160	16.1	20.0	31.4	50.5	71.2	87.3	109	134	146	157	170	191	217	233	266	283
HVM 170	170	17.2	21.3	33.3	53.6	75.7	92.7	116	142	156	167	181	203	230	248	283	301
HVM 180	180	18.2	22.5	35.3	56.8	80.1	98	122	150	165	176	191	215	244	263	299	318
HVM 185	185	18.7	23.1	36.3	58.4	82.3	101	126	155	169	181	197	221	250	270	308	327
HVM 195	195	19.7	24.4	38.2	61.5	86.8	106	133	163	178	191	207	233	264	284	324	345
HVM 208	208	21.0	26.0	40.8	65.6	92.6	113	142	174	190	204	221	249	282	303	346	368
HVM 220	220	22.2	27.5	43.1	69.4	97.9	120	150	184	201	216	234	263	298	321	366	389
HVM 250	250	25.2	31.3	49.0	78.9	111	136	170	209	229	245	266	299	338	365	416	442
HVM 245	245	24.7	30.6	48.0	77.3	109	134	167	205	224	240	260	293	332	357	407	433
HVM 270	270	27.2	33.8	52.9	85.2	120	147	184	226	247	265	287	323	365	394	449	477
HVM 295	295	29.8	36.9	57.8	93.0	131	161	201	247	270	289	313	353	399	430	490	521
HVM 300	300	30.3	37.5	58.8	94.6	134	164	204	251	274	294	319	359	406	438	499	530
HVM 320	320	32.3	40.0	62.7	101	142	175	218	268	293	314	340	383	433	467	532	566
HVM 355	355	35.8	44.4	69.6	112	158	194	242	297	325	348	377	425	481	518	590	628
HVM 345	345	34.8	43.1	67.6	109	154	188	235	288	316	338	366	413	467	503	574	610
HVM 370	370	37.3	46.3	72.5	117	165	202	252	309	338	363	393	443	501	540	615	654
HVM 395	395	39.9	49.4	77.4	125	176	215	269	330	361	387	420	473	535	576	657	698
HVM 415	415	41.9	51.9	81.3	131	185	226	282	347	380	407	441	497	562	605	690	734
HVM 420	420	42.4	52.5	82.3	132	187	229	286	351	384	412	446	503	568	613	698	742
HVM 445	445	44.9	55.6	87.2	140	198	243	303	372	407	436	473	532	602	649	740	787
HVM 465	465	46.9	58.1	91.1	147	207	254	316	389	425	456	494	556	629	678	773	822

Performance data of HVM range in Amperes

After long term float charge of fully charged cells at +20°C ±5°C (+68°F ± 9°F)

Final Cell Voltage: 1.10 V

Cell Type	C_5 Ah	Hours							Minutes					Seconds			
		10	8	5	3	2	1.5	1	30	20	15	10	5	60	30	5	1
HVM 490	490	49.4	61.3	96.0	155	218	267	333	410	448	480	520	586	663	715	815	866
HVM 510	510	51.5	63.8	99.9	161	227	278	347	426	467	500	542	610	690	744	848	902
HVM 540	540	54.5	67.5	106	170	240	294	367	451	494	529	574	646	731	788	898	955
HVM 565	565	57.0	70.6	111	178	251	308	384	472	517	554	600	676	765	824	939	999
HVM 590	590	59.5	73.8	116	186	263	322	401	493	540	578	627	706	799	860	981	1043
HVM 600	600	60.5	75.0	118	189	267	327	408	502	549	588	637	718	812	875	998	1061
HVM 615	615	62.1	76.9	121	194	274	335	418	514	563	603	653	736	832	897	1022	1087
HVM 640	640	64.6	80.0	125	202	285	349	436	535	585	627	680	766	866	933	1064	1131
HVM 660	660	66.6	82.5	129	208	294	360	449	552	604	647	701	790	893	963	1097	1167
HVM 690	690	69.6	86.3	135	218	307	376	470	577	631	676	733	826	934	1006	1147	1220
HVM 715	715	72.1	89.4	140	226	318	390	487	598	654	701	759	856	968	1043	1189	1264
HVM 740	740	74.7	92.5	145	233	329	404	504	619	677	725	786	885	1002	1079	1230	1308
HVM 785	785	79.2	98.2	154	248	349	428	534	656	718	769	834	939	1063	1145	1305	1388
HVM 810	810	81.7	101	159	255	360	442	551	677	741	794	860	969	1096	1181	1347	1432
HVM 835	835	84.3	104	164	263	372	455	568	698	764	818	887	999	1130	1218	1388	1476
HVM 860	860	86.8	108	169	271	383	469	585	719	787	843	913	1029	1164	1254	1430	1520
HVM 885	885	89.3	111	173	279	394	483	602	740	810	867	940	1059	1198	1291	1471	1564
HVM 915	915	92.3	114	179	289	407	499	623	765	837	897	972	1095	1239	1334	1521	1617
HVM 935	935	94.3	117	183	295	416	510	636	782	855	916	993	1119	1266	1364	1554	1653
HVM 960	960	96.9	120	188	303	427	524	653	803	878	941	1020	1149	1299	1400	1596	1697
HVM 985	985	99.4	123	193	311	438	537	670	824	901	965	1046	1179	1333	1437	1638	1741
HVM 1030	1030	104	129	202	325	458	562	701	861	942	1010	1094	1232	1394	1502	1712	1821
HVM 1080	1080	109	135	212	341	481	589	735	903	988	1059	1147	1292	1462	1575	1796	1909
HVM 1130	1130	114	141	221	356	503	616	769	945	1034	1108	1200	1352	1530	1648	1879	1997
HVM 1180	1180	119	148	231	372	525	643	803	987	1079	1157	1253	1412	1597	1721	1962	2086
HVM 1230	1230	124	154	241	388	547	671	837	1028	1125	1206	1307	1472	1665	1794	2045	2174
HVM 1280	1280	129	160	251	404	570	698	871	1070	1171	1255	1360	1532	1733	1867	2128	2263
HVM 1330	1330	134	166	261	420	592	725	905	1112	1217	1304	1413	1591	1800	1940	2211	2351
HVM 1340	1340	135	168	263	423	596	731	912	1120	1226	1313	1423	1603	1814	1954	2228	2369

Performance data of HVM range in Amperes

After long term float charge of fully charged cells at +20°C ±5°C (+68°F ± 9°F)

Final Cell Voltage: 1.05 V

Cell Type	C_5 Ah	Hours							Minutes					Seconds			
		10	8	5	3	2	1.5	1	30	20	15	10	5	60	30	5	1
HVM 7	7	0.72	0.89	1.39	2.30	3.31	4.29	5.46	7.58	8.72	9.42	10.4	12.5	13.7	15.1	18.6	20.9
HVM 12	12	1.24	1.53	2.38	3.94	5.68	7.35	9.36	13.0	15.0	16.1	17.8	21.5	23.6	26.0	31.8	35.8
HVM 16	16	1.65	2.04	3.18	5.25	7.57	9.80	12.5	17.3	19.9	21.5	23.8	28.6	31.4	34.6	42.5	47.7
HVM 20	20	2.07	2.55	3.97	6.57	9.46	12.2	15.6	21.7	24.9	26.9	29.7	35.8	39.3	43.3	53.1	59.6
HVM 24	24	2.48	3.06	4.77	7.88	11.4	14.7	18.7	26.0	29.9	32.3	35.6	42.9	47.1	51.9	63.7	71.6
HVM 28	28	2.89	3.57	5.56	9.19	13.2	17.1	21.8	30.3	34.9	37.7	41.6	50.1	55.0	60.6	74.3	83.5
HVM 32	32	3.30	4.08	6.36	10.5	15.1	19.6	25.0	34.7	39.9	43.0	47.5	57.2	62.8	69.2	84.9	95.4
HVM 36	36	3.72	4.59	7.15	11.8	17.0	22.0	28.1	39.0	44.9	48.4	53.5	64.4	70.7	77.9	95.5	107
HVM 40	40	4.13	5.10	7.95	13.1	18.9	24.5	31.2	43.3	49.8	53.8	59.4	71.6	78.5	86.6	106	119
HVM 45	45	4.65	5.74	8.94	14.8	21.3	27.6	35.1	48.7	56.1	60.5	66.8	80.5	88.4	97.4	119	134
HVM 57	57	5.81	7.25	11.3	18.5	27.0	35.0	45.6	59.9	66.7	71.1	77.6	87.0	93.2	99.7	113	121
HVM 65	65	6.63	8.27	12.9	21.0	30.8	39.9	52.0	68.3	76.0	81.1	88.5	99.2	106	114	129	138
HVM 75	75	7.65	9.55	14.9	24.3	35.5	46.0	60.0	78.8	87.7	93.6	102	114	123	131	149	160
HVM 90	90	9.18	11.5	17.9	29.1	42.6	55.2	72.0	94.5	105	112	123	137	147	157	179	192
HVM 100	100	10.2	12.7	19.9	32.4	47.4	61.3	80.0	105	117	125	136	153	163	175	199	213
HVM 110	110	11.2	14.0	21.9	35.6	52.1	67.5	88.0	116	129	137	150	168	180	192	219	234
HVM 125	125	12.7	15.9	24.9	40.5	59.2	76.7	100	131	146	156	170	191	204	219	249	266
HVM 138	138	14.1	17.6	27.5	44.7	65.3	84.7	110	145	161	172	188	211	226	241	274	294
HVM 150	150	15.3	19.1	29.9	48.6	71.0	92.0	120	158	175	187	204	229	245	262	298	319
HVM 160	160	16.3	20.4	31.9	51.8	75.8	98.1	128	168	187	200	218	244	262	280	318	341
HVM 170	170	17.3	21.6	33.8	55.1	80.5	104	136	179	199	212	232	259	278	297	338	362
HVM 180	180	18.4	22.9	35.8	58.3	85.2	110	144	189	211	225	245	275	294	315	358	383
HVM 185	185	18.9	23.5	36.8	59.9	87.6	113	148	194	216	231	252	282	302	323	368	394
HVM 195	195	19.9	24.8	38.8	63.1	92.3	120	156	205	228	243	266	298	319	341	388	415
HVM 208	208	21.2	26.5	41.4	67.4	98.5	128	166	218	243	260	283	317	340	364	414	443
HVM 220	220	22.4	28.0	43.8	71.2	104	135	176	231	257	275	300	336	360	385	437	468
HVM 245	245	25.0	31.2	48.8	79.3	116	150	196	257	287	306	334	374	401	428	487	522
HVM 250	250	25.5	31.8	49.8	81.0	118	153	200	263	292	312	341	382	409	437	497	532
HVM 270	270	27.5	34.4	53.8	87.4	128	166	216	284	316	337	368	412	441	472	537	575
HVM 295	295	30.1	37.5	58.7	95.5	140	181	236	310	345	368	402	450	482	516	587	628
HVM 300	300	30.6	38.2	59.7	97.1	142	184	240	315	351	374	409	458	490	524	597	639
HVM 320	320	32.6	40.7	63.7	104	152	196	256	336	374	399	436	488	523	559	636	681
HVM 345	345	35.2	43.9	68.7	112	163	212	276	362	404	431	470	526	564	603	686	734
HVM 355	355	36.2	45.2	70.7	115	168	218	284	373	415	443	484	542	580	621	706	756
HVM 370	370	37.7	47.1	73.7	120	175	227	296	389	433	462	504	565	605	647	736	788
HVM 395	395	40.3	50.3	78.6	128	187	242	316	415	462	493	538	603	646	691	785	841
HVM 415	415	42.3	52.8	82.6	134	197	255	332	436	486	518	565	633	678	726	825	883
HVM 420	420	42.8	53.5	83.6	136	199	258	336	441	491	524	572	641	687	734	835	894
HVM 445	445	45.4	56.6	88.6	144	211	273	356	467	521	555	606	679	727	778	885	947
HVM 465	465	47.4	59.2	92.6	151	220	285	372	488	544	580	633	710	760	813	925	990

Performance data of HVM range in Amperes

After long term float charge of fully charged cells at +20°C ±5°C (+68°F ± 9°F)

Final Cell Voltage: 1.05 V

Cell Type	C_5 Ah	Hours							Minutes					Seconds			
		10	8	5	3	2	1.5	1	30	20	15	10	5	60	30	5	1
HVM 490	490	50.0	62.4	97.6	159	232	301	392	515	573	612	667	748	801	857	974	1043
HVM 510	510	52.0	64.9	102	165	242	313	408	536	597	636	695	778	834	892	1014	1086
HVM 540	540	55.1	68.7	108	175	256	331	432	567	632	674	735	824	883	944	1074	1149
HVM 565	565	57.6	71.9	112	183	268	347	452	593	661	705	770	862	924	988	1123	1203
HVM 590	590	60.2	75.1	117	191	279	362	472	620	690	736	804	900	965	1031	1173	1256
HVM 600	600	61.2	76.4	119	194	284	368	480	630	702	749	817	916	981	1049	1193	1277
HVM 615	615	62.7	78.3	122	199	291	377	492	646	720	768	838	939	1005	1075	1223	1309
HVM 640	640	65.3	81.5	127	207	303	393	512	672	749	799	872	977	1046	1119	1273	1362
HVM 660	660	67.3	84.0	131	214	313	405	528	693	772	824	899	1007	1079	1154	1312	1405
HVM 690	690	70.4	87.8	137	223	327	423	552	725	807	861	940	1053	1128	1206	1372	1469
HVM 715	715	72.9	91.0	142	232	339	439	572	751	837	892	974	1091	1169	1250	1422	1522
HVM 740	740	75.5	94.2	147	240	350	454	592	777	866	924	1008	1129	1210	1294	1471	1575
HVM 785	785	80.0	99.9	156	254	372	482	628	825	918	980	1069	1198	1283	1372	1561	1671
HVM 810	810	82.6	103	161	262	384	497	648	851	948	1011	1103	1236	1324	1416	1611	1724
HVM 835	835	85.1	106	166	270	395	512	668	877	977	1042	1137	1274	1365	1460	1660	1777
HVM 860	860	87.7	109	171	278	407	528	688	903	1006	1073	1171	1312	1406	1504	1710	1831
HVM 885	885	90.2	113	176	287	419	543	708	930	1035	1105	1205	1351	1447	1547	1760	1884
HVM 915	915	93.3	116	182	296	433	561	732	961	1071	1142	1246	1396	1496	1600	1819	1948
HVM 935	935	95.3	119	186	303	443	574	748	982	1094	1167	1273	1427	1529	1635	1859	1990
HVM 960	960	97.9	122	191	311	455	589	768	1008	1123	1198	1308	1465	1569	1678	1909	2043
HVM 985	985	100	125	196	319	466	604	788	1035	1152	1229	1342	1503	1610	1722	1959	2097
HVM 1030	1030	105	131	205	334	488	632	824	1082	1205	1285	1403	1572	1684	1801	2048	2192
HVM 1080	1080	110	137	215	350	511	662	864	1134	1264	1348	1471	1648	1766	1888	2148	2299
HVM 1130	1130	115	144	225	366	535	693	904	1187	1322	1410	1539	1724	1847	1976	2247	2405
HVM 1180	1180	120	150	235	382	559	724	944	1239	1381	1473	1607	1801	1929	2063	2346	2512
HVM 1230	1230	125	157	245	398	582	755	984	1292	1439	1535	1675	1877	2011	2150	2446	2618
HVM 1280	1280	131	163	255	414	606	785	1024	1345	1498	1597	1743	1953	2093	2238	2545	2725
HVM 1330	1330	136	169	265	431	630	816	1064	1397	1556	1660	1811	2030	2174	2325	2645	2831
HVM 1340	1340	137	171	267	434	635	822	1072	1408	1568	1672	1825	2045	2191	2343	2665	2852

Performance data of HVM range in Amperes

After long term float charge of fully charged cells at +20°C ±5°C (+68°F ± 9°F)

Final Cell Voltage: 1.00 V

Cell Type	C_5 Ah	Hours							Minutes					Seconds			
		10	8	5	3	2	1.5	1	30	20	15	10	5	60	30	5	1
HVM 7	7	0.73	0.90	1.40	2.31	3.35	4.39	6.35	8.89	10.3	11.4	13.0	15.3	16.5	18.0	22.1	24.8
HVM 12	12	1.24	1.54	2.40	3.96	5.75	7.52	10.9	15.2	17.7	19.5	22.3	26.3	28.3	30.9	37.8	42.5
HVM 16	16	1.66	2.05	3.20	5.28	7.66	10.0	14.5	20.3	23.5	26.0	29.7	35.0	37.7	41.2	50.4	56.6
HVM 20	20	2.07	2.57	4.00	6.60	9.58	12.5	18.1	25.4	29.4	32.5	37.2	43.8	47.1	51.5	63.0	70.8
HVM 24	24	2.49	3.08	4.80	7.92	11.5	15.0	21.8	30.5	35.3	39.0	44.6	52.5	56.5	61.8	75.6	85.0
HVM 28	28	2.90	3.59	5.60	9.24	13.4	17.5	25.4	35.6	41.2	45.5	52.0	61.3	66.0	72.1	88.2	99.1
HVM 32	32	3.32	4.10	6.40	10.6	15.3	20.0	29.0	40.7	47.1	52.0	59.5	70.0	75.4	82.4	101	113
HVM 36	36	3.73	4.62	7.20	11.9	17.2	22.6	32.7	45.7	53.0	58.5	66.9	78.8	84.8	92.7	113	127
HVM 40	40	4.15	5.13	8.00	13.2	19.2	25.1	36.3	50.8	58.8	65.0	74.3	87.5	94.2	103	126	142
HVM 45	45	4.66	5.77	9.00	14.9	21.6	28.2	40.8	57.2	66.2	73.1	83.6	98.5	106	116	142	159
HVM 57	57	5.88	7.28	11.4	18.6	27.3	35.8	51.6	71.6	80.7	86.6	95.4	106	111	118	134	144
HVM 65	65	6.71	8.30	13.0	21.2	31.2	40.8	58.8	81.7	92.0	98.8	109	121	126	134	153	164
HVM 75	75	7.74	9.58	15.0	24.5	36.0	47.0	67.9	94.2	106	114	126	140	146	155	176	189
HVM 90	90	9.29	11.50	18.0	29.4	43.2	56.5	81.4	113	127	137	151	168	175	186	212	227
HVM 100	100	10.3	12.8	20.0	32.7	48.0	62.7	90.5	126	142	152	167	186	194	206	235	252
HVM 110	110	11.4	14.0	22.0	35.9	52.7	69.0	99.5	138	156	167	184	205	214	227	259	277
HVM 125	125	12.9	16.0	25.0	40.8	59.9	78.4	113	157	177	190	209	233	243	258	294	315
HVM 138	138	14.2	17.6	27.6	45.1	66.2	86.6	125	173	195	210	231	257	268	285	324	348
HVM 150	150	15.5	19.2	30.0	49.0	71.9	94.1	136	188	212	228	251	279	291	310	353	378
HVM 160	160	16.5	20.4	32.0	52.3	76.7	100	145	201	227	243	268	298	311	330	376	403
HVM 170	170	17.5	21.7	34.0	55.5	81.5	107	154	214	241	258	285	317	330	351	400	429
HVM 180	180	18.6	23.0	36.0	58.8	86.3	113	163	226	255	274	301	335	349	371	423	454
HVM 185	185	19.1	23.6	37.0	60.4	88.7	116	167	232	262	281	310	345	359	382	435	467
HVM 195	195	20.1	24.9	39.0	63.7	93.5	122	176	245	276	296	326	363	379	402	458	492
HVM 208	208	21.5	26.6	41.6	67.9	99.7	130	188	261	295	316	348	387	404	429	489	525
HVM 220	220	22.7	28.1	44.0	71.9	105	138	199	276	312	334	368	410	427	454	517	555
HVM 245	245	25.3	31.3	49.0	80.0	117	154	222	308	347	372	410	456	476	506	576	618
HVM 250	250	25.8	31.9	50.0	81.7	120	157	226	314	354	380	418	466	485	516	588	630
HVM 270	270	27.9	34.5	54.0	88.2	129	169	244	339	382	410	452	503	524	557	635	681
HVM 295	295	30.4	37.7	59.0	96.4	141	185	267	371	418	448	494	549	573	609	694	744
HVM 300	300	31.0	38.3	60.0	98.0	144	188	271	377	425	456	502	559	582	619	705	757
HVM 320	320	33.0	40.9	64.0	105	153	201	290	402	453	486	536	596	621	660	752	807
HVM 345	345	35.6	44.1	69.0	113	165	216	312	433	489	524	578	643	670	712	811	870
HVM 355	355	36.6	45.3	71.0	116	170	223	321	446	503	539	594	661	689	733	835	895
HVM 370	370	38.2	47.3	74.0	121	177	232	335	465	524	562	619	689	718	764	870	933
HVM 395	395	40.8	50.5	79.0	129	189	248	357	496	559	600	661	736	767	815	929	996
HVM 415	415	42.8	53.0	83.0	136	199	260	376	521	588	631	695	773	805	856	976	1047
HVM 420	420	43.3	53.6	84.0	137	201	263	380	528	595	638	703	782	815	867	987	1059
HVM 445	445	45.9	56.8	89.0	145	213	279	403	559	630	676	745	829	864	918	1046	1122
HVM 465	465	48.0	59.4	93.0	152	223	292	421	584	658	707	778	866	903	960	1093	1173

Performance data of HVM range in Amperes

After long term float charge of fully charged cells at +20°C ±5°C (+68°F ± 9°F)

Final Cell Voltage: 1.00 V

Cell Type	C_5 Ah	Hours							Minutes					Seconds			
		10	8	5	3	2	1.5	1	30	20	15	10	5	60	30	5	1
HVM 490	490	50.6	62.6	98.0	160	235	307	443	616	694	745	820	913	951	1011	1152	1236
HVM 510	510	52.6	65.1	102	167	245	320	462	641	722	775	854	950	990	1053	1199	1286
HVM 540	540	55.7	69.0	108	176	259	339	489	678	765	821	904	1006	1048	1114	1269	1362
HVM 565	565	58.3	72.2	113	185	271	354	511	710	800	859	946	1052	1097	1166	1328	1425
HVM 590	590	60.9	75.4	118	193	283	370	534	741	835	897	988	1099	1145	1218	1387	1488
HVM 600	600	61.9	76.6	120	196	288	376	543	754	850	912	1004	1117	1165	1238	1411	1513
HVM 615	615	63.5	78.6	123	201	295	386	557	773	871	935	1029	1145	1194	1269	1446	1551
HVM 640	640	66.0	81.7	128	209	307	401	579	804	906	972	1071	1192	1242	1321	1505	1614
HVM 660	660	68.1	84.3	132	216	316	414	597	829	935	1003	1105	1229	1281	1362	1552	1664
HVM 690	690	71.2	88.1	138	225	331	433	624	867	977	1048	1155	1285	1339	1424	1622	1740
HVM 715	715	73.8	91.3	143	234	343	448	647	898	1012	1086	1197	1332	1388	1476	1681	1803
HVM 740	740	76.4	94.5	148	242	355	464	670	930	1048	1124	1239	1378	1436	1527	1740	1866
HVM 785	785	81.0	100	157	256	376	492	710	986	1112	1193	1314	1462	1524	1620	1845	1980
HVM 810	810	83.6	103	162	265	388	508	733	1017	1147	1231	1356	1508	1572	1672	1904	2043
HVM 835	835	86.2	107	167	273	400	524	756	1049	1182	1269	1398	1555	1621	1723	1963	2106
HVM 860	860	88.7	110	172	281	412	539	778	1080	1218	1307	1440	1602	1669	1775	2022	2169
HVM 885	885	91.3	113	177	289	424	555	801	1112	1253	1345	1481	1648	1718	1827	2081	2232
HVM 915	915	94.4	117	183	299	439	574	828	1149	1296	1390	1532	1704	1776	1888	2151	2307
HVM 935	935	96.5	119	187	305	448	586	846	1175	1324	1421	1565	1741	1815	1930	2198	2358
HVM 960	960	99.1	123	192	314	460	602	869	1206	1359	1459	1607	1788	1864	1981	2257	2421
HVM 985	985	102	126	197	322	472	618	891	1237	1395	1497	1649	1834	1912	2033	2316	2484
HVM 1030	1030	106	132	206	336	494	646	932	1294	1459	1565	1724	1918	1999	2126	2421	2597
HVM 1080	1080	111	138	216	353	518	677	977	1357	1529	1641	1808	2011	2096	2229	2539	2724
HVM 1130	1130	117	144	226	369	542	709	1023	1419	1600	1717	1892	2104	2194	2332	2657	2850
HVM 1180	1180	122	151	236	385	566	740	1068	1482	1671	1793	1975	2198	2291	2435	2774	2976
HVM 1230	1230	127	157	246	402	590	771	1113	1545	1742	1869	2059	2291	2388	2539	2892	3102
HVM 1280	1280	132	163	256	418	614	803	1158	1608	1813	1945	2143	2384	2485	2642	3009	3228
HVM 1330	1330	137	170	266	434	638	834	1204	1671	1883	2021	2226	2477	2582	2745	3127	3354
HVM 1340	1340	138	171	268	438	643	840	1213	1683	1898	2036	2243	2496	2601	2766	3150	3379

VentPro Next Generation

Cell dimensions HVL range

Cell type	Capacity (C_5 Ah)	Cell dimensions in mm						Approx. weight per cell in kg	Cell connection bolt size	Container size reference
		Height	Width	Length per block						
				1.2V L(1)	2.4V L(2)	3.6V L(3)	4.8V L(4)			
HVL 15	15							1.60		
HVL 24	24	264	123		79	115	151	1.90	M6	B22-1
HVL 30	30							2.00		
HVL 40	40	264	123		103	151	198	2.40	M6	B23-1
HVL 47	47	264	123		127	187	246	2.70	M6	B24-1
HVL 55	55							2.90		
HVL 62	62							4.50		
HVL 69	69	405	195		79	115	156	4.60	M10	B45-1
HVL 75	75							4.70		
HVL 85	85							4.90		
HVL 95	95							6.50		
HVL 110	110	405	195		103	151	198	6.70	M10	B43-1
HVL 125	125							7.00		
HVL 140	140							7.70		
HVL 160	160	405	195		115	169	228	8.00	M10	B42A-1
HVL 170	170							8.20		
HVL 185	185							9.80		
HVL 210	210	405	195		159	232	304	10.2	M10	B41B-1
HVL 225	225							10.4		
HVL 235	235							11.2		
HVL 255	255	405	195		183	268	352	11.6	M10	B41-1
HVL 270	270							11.8		
HVL 280	280							15.4		
HVL 300	300	405	195	120	228	336		15.8	2 x M10	B42A-2
HVL 325	325							16.2		
HVL 350	350							16.7		
HVL 375	375							19.6		
HVL 400	400	405	195	159	304			19.9	2 x M10	B41B-2
HVL 420	420							20.4		
HVL 450	450							20.9		
HVL 470	470							22.4		
HVL 495	495	405	195	183				23.0	2 x M10	B41-2
HVL 515	515							23.3		
HVL 540	540							23.6		
HVL 560	560							29.2		
HVL 585	585							29.6		
HVL 610	610	405	195	232				29.9	3 x M10	B41B-3
HVL 630	630							30.5		
HVL 650	650							30.8		
HVL 675	675							31.1		
HVL 700	700							33.5		
HVL 725	725							34.2		
HVL 750	750	405	195	268				34.5	3 x M10	B41-3
HVL 775	775							34.8		
HVL 800	800							35.2		
HVL 840	840							40.5		
HVL 870	870	405	195	304				41.1	4 x M10	B41B-4
HVL 890	890							41.3		
HVL 910	910							41.6		
HVL 940	940							44.5		
HVL 980	980							45.5		
HVL 1000	1000	405	195	352				45.9	4 x M10	B41-4
HVL 1030	1030							46.3		
HVL 1080	1080							46.9		
HVL 1120	1120	405	195	378				51.6	5 x M10	B41B-5
HVL 1180	1180							55.7		
HVL 1220	1220							56.7		
HVL 1260	1260	405	195	437				57.3	5 x M10	B41-5
HVL 1300	1300							57.9		
HVL 1350	1350							58.6		
HVL 1400	1400							66.6		
HVL 1450	1450							68.0		
HVL 1500	1500	405	195	522				68.7	6 x M10	B41-6
HVL 1540	1540							69.2		
HVL 1600	1600							70.0		
HVL 1680	1680							71.2		

Performance data of HVL range in Amperes

After long term float charge of fully charged cells at +20°C ±5°C (+68°F ± 9°F)

Final Cell Voltage: 1.14 V

Cell Type	C_5 Ah	Hours							Minutes					Seconds			
		10	8	5	3	2	1.5	1	30	20	15	10	5	60	30	5	1
HVL 15	15	1.41	1.66	2.26	3.02	3.70	4.15	4.82	6.16	6.80	7.25	7.79	8.62	10.1	11.3	14.0	15.3
HVL 24	24	2.26	2.66	3.62	4.83	5.92	6.64	7.72	9.86	10.9	11.6	12.5	13.8	16.1	18.0	22.3	24.5
HVL 30	30	2.82	3.33	4.53	6.04	7.40	8.30	9.65	12.3	13.6	14.5	15.6	17.2	20.2	22.6	27.9	30.6
HVL 40	40	3.76	4.43	6.03	8.05	9.87	11.1	12.9	16.4	18.1	19.3	20.8	23.0	26.9	30.1	37.2	40.9
HVL 47	47	4.42	5.21	7.09	9.45	11.6	13.0	15.1	19.3	21.3	22.7	24.4	27.0	31.6	35.3	43.7	48.0
HVL 55	55	5.17	6.10	8.30	11.1	13.6	15.2	17.7	22.6	24.9	26.6	28.6	31.6	37.0	41.3	51.2	56.2
HVL 62	62	5.89	7.01	9.69	12.2	14.6	16.1	18.1	21.1	22.9	24.5	26.4	29.8	30.9	34.3	40.7	43.3
HVL 69	69	6.55	7.81	10.8	13.6	16.2	17.9	20.1	23.5	25.5	27.2	29.3	33.2	34.4	38.2	45.3	48.2
HVL 75	75	7.12	8.48	11.7	14.8	17.6	19.5	21.8	25.5	27.7	29.6	31.9	36.0	37.4	41.5	49.2	52.4
HVL 85	85	8.07	9.62	13.3	16.7	20.0	22.1	24.8	28.9	31.4	33.5	36.1	40.9	42.3	47.0	55.8	59.4
HVL 95	95	9.02	10.7	14.8	18.7	22.3	24.7	27.7	32.3	35.1	37.5	40.4	45.7	47.3	52.5	62.3	66.4
HVL 110	110	10.5	12.4	17.2	21.7	25.9	28.6	32.0	37.4	40.6	43.4	46.8	52.9	54.8	60.8	72.2	76.9
HVL 125	125	11.9	14.1	19.5	24.6	29.4	32.5	36.4	42.5	46.1	49.3	53.1	60.1	62.3	69.1	82.0	87.3
HVL 140	140	13.3	15.8	21.9	27.6	32.9	36.4	40.8	47.6	51.7	55.3	59.5	67.3	69.7	77.4	91.9	97.8
HVL 160	160	15.2	18.1	25.0	31.5	37.6	41.6	46.6	54.4	59.0	63.1	68.0	76.9	79.7	88.5	105	112
HVL 170	170	16.2	19.2	26.6	33.5	40.0	44.2	49.5	57.8	62.7	67.1	72.2	81.7	84.7	94.0	112	119
HVL 185	185	17.6	20.9	28.9	36.4	43.5	48.1	53.9	62.9	68.3	73.0	78.6	88.9	92.2	102	121	129
HVL 210	210	20.0	23.8	32.8	41.3	49.4	54.6	61.2	71.4	77.5	82.9	89.2	101	105	116	138	147
HVL 225	225	21.4	25.5	35.2	44.3	52.9	58.5	65.5	76.5	83.0	88.8	95.6	108	112	124	148	157
HVL 235	235	22.3	26.6	36.7	46.3	55.2	61.1	68.4	79.9	86.7	92.7	99.9	113	117	130	154	164
HVL 255	255	24.2	28.8	39.8	50.2	59.9	66.3	74.3	86.7	94.1	101	108	123	127	141	167	178
HVL 270	270	25.7	30.5	42.2	53.2	63.5	70.2	78.6	91.8	99.6	107	115	130	135	149	177	189
HVL 280	280	26.6	31.7	43.8	55.1	65.8	72.8	81.6	95.2	103	111	119	135	139	155	184	196
HVL 300	300	28.5	33.9	46.9	59.1	70.5	78.0	87.4	102	111	118	128	144	149	166	197	210
HVL 325	325	30.9	36.8	50.8	64.0	76.4	84.5	94.7	111	120	128	138	156	162	180	213	227
HVL 350	350	33.3	39.6	54.7	68.9	82.3	91.0	102	119	129	138	149	168	174	194	230	245
HVL 375	375	35.6	42.4	58.6	73.8	88.1	97.5	109	128	138	148	159	180	187	207	246	262
HVL 400	400	38.0	45.3	62.5	78.8	94.0	104	117	136	148	158	170	192	199	221	263	280
HVL 420	420	39.9	47.5	65.6	82.7	98.7	109	122	143	155	166	179	202	209	232	276	293
HVL 450	450	42.7	50.9	70.3	88.6	106	117	131	153	166	178	191	216	224	249	295	314
HVL 470	470	44.6	53.2	73.4	92.5	110	122	137	160	173	185	200	226	234	260	308	328
HVL 495	495	47.0	56.0	77.3	97.5	116	129	144	168	183	195	210	238	247	274	325	346
HVL 515	515	48.9	58.3	80.5	101	121	134	150	175	190	203	219	248	257	285	338	360
HVL 540	540	51.3	61.1	84.4	106	127	140	157	184	199	213	230	260	269	299	354	377
HVL 560	560	53.2	63.4	87.5	110	132	146	163	190	207	221	238	269	279	310	368	391
HVL 585	585	55.6	66.2	91.4	115	137	152	170	199	216	231	249	281	291	324	384	409
HVL 610	610	57.9	69.0	95.3	120	143	159	178	207	225	241	259	293	304	337	400	426
HVL 630	630	59.8	71.3	98.4	124	148	164	183	214	232	249	268	303	314	348	413	440
HVL 650	650	61.7	73.5	102	128	153	169	189	221	240	257	276	312	324	360	427	454
HVL 675	675	64.1	76.4	105	133	159	176	197	230	249	266	287	324	336	373	443	472

Performance data of HVL range in Amperes

After long term float charge of fully charged cells at +20°C ±5°C (+68°F ± 9°F)

Final Cell Voltage: 1.14 V

Cell Type	C_5 Ah	Hours							Minutes					Seconds			
		10	8	5	3	2	1.5	1	30	20	15	10	5	60	30	5	1
HVL 700	700	66.5	79.2	109	138	165	182	204	238	258	276	298	336	349	387	459	489
HVL 725	725	68.9	82.0	113	143	170	189	211	247	268	286	308	348	361	401	476	507
HVL 750	750	71.2	84.8	117	148	176	195	218	255	277	296	319	360	374	415	492	524
HVL 775	775	73.6	87.7	121	153	182	202	226	264	286	306	329	372	386	429	509	542
HVL 800	800	76.0	90.5	125	158	188	208	233	272	295	316	340	384	399	442	525	559
HVL 840	840	79.8	95.0	131	165	197	218	245	286	310	332	357	404	418	465	551	587
HVL 870	870	82.6	98.4	136	171	204	226	253	296	321	343	370	418	433	481	571	608
HVL 890	890	84.5	101	139	175	209	231	259	303	328	351	378	428	443	492	584	622
HVL 910	910	86.4	103	142	179	214	237	265	309	336	359	387	437	453	503	597	636
HVL 940	940	89.3	106	147	185	221	244	274	320	347	371	400	452	468	520	617	657
HVL 980	980	93.1	111	153	193	230	255	285	333	362	387	417	471	488	542	643	685
HVL 1000	1000	95.0	113	156	197	235	260	291	340	369	395	425	481	498	553	656	699
HVL 1030	1030	97.8	117	161	203	242	268	300	350	380	407	438	495	513	570	676	720
HVL 1080	1080	103	122	169	213	254	281	315	367	399	426	459	519	538	597	709	755
HVL 1120	1120	106	127	175	221	263	291	326	381	413	442	476	538	558	619	735	783
HVL 1180	1180	112	133	184	232	277	307	344	401	435	466	502	567	588	653	774	825
HVL 1220	1220	116	138	191	240	287	317	355	415	450	482	519	586	608	675	801	853
HVL 1260	1260	120	143	197	248	296	328	367	428	465	497	536	606	628	697	827	880
HVL 1300	1300	124	147	203	256	306	338	379	442	480	513	553	625	648	719	853	908
HVL 1350	1350	128	153	211	266	317	351	393	459	498	533	574	649	673	747	886	943
HVL 1400	1400	133	158	219	276	329	364	408	476	517	553	595	673	697	774	919	978
HVL 1450	1450	138	164	227	285	341	377	422	493	535	572	616	697	722	802	952	1013
HVL 1500	1500	143	170	234	295	353	390	437	510	554	592	638	721	747	830	984	1048
HVL 1540	1540	146	174	241	303	362	400	449	524	568	608	654	740	767	852	1011	1076
HVL 1600	1600	152	181	250	315	376	416	466	544	590	631	680	769	797	885	1050	1118
HVL 1680	1680	160	190	263	331	395	437	489	571	620	663	714	807	837	929	1103	1174

Performance data of HVL range in Amperes

After long term float charge of fully charged cells at +20°C ±5°C (+68°F ± 9°F)

Final Cell Voltage: 1.10 V

Cell Type	C_5 Ah	Hours							Minutes					Seconds			
		10	8	5	3	2	1.5	1	30	20	15	10	5	60	30	5	1
HVL 15	15	1.50	1.84	2.68	3.70	4.66	5.37	6.38	7.89	8.72	9.26	10.1	11.5	12.7	14.1	17.4	19.2
HVL 24	24	2.40	2.94	4.29	5.92	7.46	8.59	10.2	12.6	14.0	14.8	16.1	18.4	20.4	22.5	27.8	30.8
HVL 30	30	3.00	3.67	5.37	7.40	9.32	10.7	12.8	15.8	17.4	18.5	20.1	23.0	25.5	28.2	34.8	38.5
HVL 40	40	4.00	4.89	7.16	9.87	12.4	14.3	17.0	21.0	23.3	24.7	26.8	30.6	34.0	37.5	46.4	51.3
HVL 47	47	4.70	5.75	8.41	11.6	14.6	16.8	20.0	24.7	27.3	29.0	31.5	36.0	39.9	44.1	54.5	60.3
HVL 55	55	5.50	6.73	9.84	13.6	17.1	19.7	23.4	28.9	32.0	33.9	36.9	42.1	46.7	51.6	63.8	70.6
HVL 62	62	6.20	7.63	11.4	15.6	18.9	20.8	23.4	27.9	30.1	31.5	33.1	35.6	39.3	42.9	50.9	54.9
HVL 69	69	6.90	8.50	12.7	17.4	21.0	23.2	26.0	31.0	33.5	35.0	36.8	39.6	43.7	47.7	56.6	61.1
HVL 75	75	7.50	9.23	13.8	18.9	22.9	25.2	28.3	33.7	36.4	38.1	40.0	43.1	47.5	51.8	61.5	66.4
HVL 85	85	8.50	10.5	15.6	21.4	25.9	28.5	32.1	38.2	41.3	43.1	45.4	48.8	53.8	58.8	69.8	75.2
HVL 95	95	9.50	11.7	17.4	23.9	29.0	31.9	35.9	42.7	46.1	48.2	50.7	54.6	60.1	65.7	78.0	84.1
HVL 110	110	11.0	13.5	20.2	27.7	33.5	36.9	41.5	49.5	53.4	55.8	58.7	63.2	69.6	76.0	90.3	97.3
HVL 125	125	12.5	15.4	22.9	31.5	38.1	42.0	47.2	56.2	60.7	63.4	66.7	71.8	79.1	86.4	103	111
HVL 140	140	14.0	17.2	25.7	35.3	42.7	47.0	52.8	63.0	68.0	71.1	74.7	80.4	88.6	96.8	115	124
HVL 160	160	16.0	19.7	29.3	40.3	48.8	53.7	60.4	72.0	77.7	81.2	85.4	91.9	101	111	131	142
HVL 170	170	17.0	20.9	31.2	42.8	51.8	57.1	64.2	76.5	82.6	86.3	90.7	97.6	108	118	140	150
HVL 185	185	18.5	22.8	33.9	46.6	56.4	62.1	69.8	83.2	89.8	93.9	98.7	106	117	128	152	164
HVL 210	210	21.0	25.9	38.5	52.9	64.0	70.5	79.3	94.5	102	107	112	121	133	145	172	186
HVL 225	225	22.5	27.7	41.3	56.7	68.6	75.5	84.9	101	109	114	120	129	142	156	185	199
HVL 235	235	23.5	28.9	43.1	59.2	71.7	78.9	88.7	106	114	119	125	135	149	162	193	208
HVL 255	255	25.5	31.4	46.8	64.3	77.8	85.6	96.3	115	124	129	136	146	161	176	209	226
HVL 270	270	27.0	33.2	49.5	68.0	82.3	90.6	102	122	131	137	144	155	171	187	222	239
HVL 280	280	28.0	34.5	51.4	70.6	85.4	94.0	106	126	136	142	149	161	177	194	230	248
HVL 300	300	30.0	36.9	55.0	75.6	91.5	101	113	135	146	152	160	172	190	207	246	266
HVL 325	325	32.5	40.0	59.6	81.9	99.1	109	123	146	158	165	173	187	206	225	267	288
HVL 350	350	35.0	43.1	64.2	88.2	107	117	132	157	170	178	187	201	222	242	287	310
HVL 375	375	37.5	46.2	68.8	94.5	114	126	142	169	182	190	200	215	237	259	308	332
HVL 400	400	40.0	49.3	73.4	101	122	134	151	180	194	203	214	230	253	277	328	354
HVL 420	420	42.0	51.7	77.0	106	128	141	159	189	204	213	224	241	266	290	345	372
HVL 450	450	45.0	55.4	82.5	113	137	151	170	202	219	228	240	258	285	311	369	398
HVL 470	470	47.0	57.9	86.2	118	143	158	177	211	228	239	251	270	298	325	386	416
HVL 495	495	49.5	60.9	90.8	125	151	166	187	223	240	251	264	284	313	342	406	438
HVL 515	515	51.5	63.4	94.5	130	157	173	194	232	250	261	275	296	326	356	423	456
HVL 540	540	54.0	66.5	99.0	136	165	181	204	243	262	274	288	310	342	373	443	478
HVL 560	560	56.0	69.0	103	141	171	188	211	252	272	284	299	322	355	387	460	496
HVL 585	585	58.5	72.0	107	147	178	196	221	263	284	297	312	336	370	404	480	518
HVL 610	610	61.0	75.1	112	154	186	205	230	274	296	310	326	350	386	422	501	540
HVL 630	630	63.0	77.6	116	159	192	211	238	283	306	320	336	362	399	435	517	558
HVL 650	650	65.0	80.0	119	164	198	218	245	292	316	330	347	373	412	449	533	575
HVL 675	675	67.5	83.1	124	170	206	227	255	304	328	343	360	388	427	467	554	597

Performance data of HVL range in Amperes

After long term float charge of fully charged cells at +20°C ±5°C (+68°F ± 9°F)

Final Cell Voltage: 1.10 V

Cell Type	C_5 Ah	Hours							Minutes					Seconds			
		10	8	5	3	2	1.5	1	30	20	15	10	5	60	30	5	1
HVL 700	700	70.0	86.2	128	176	214	235	264	315	340	355	374	402	443	484	574	619
HVL 725	725	72.5	89.3	133	183	221	243	274	326	352	368	387	416	459	501	595	642
HVL 750	750	75.0	92.3	138	189	229	252	283	337	364	381	400	431	475	518	615	664
HVL 775	775	77.5	95.4	142	195	236	260	293	349	376	393	414	445	491	536	636	686
HVL 800	800	80.0	98.5	147	202	244	269	302	360	389	406	427	460	507	553	656	708
HVL 840	840	84.0	103	154	212	256	282	317	378	408	426	448	482	532	581	689	743
HVL 870	870	87.0	107	160	219	265	292	328	391	423	442	464	500	551	601	714	770
HVL 890	890	89.0	110	163	224	271	299	336	400	432	452	475	511	563	615	730	788
HVL 910	910	91.0	112	167	229	278	305	344	409	442	462	486	523	576	629	747	805
HVL 940	940	94.0	116	172	237	287	315	355	423	456	477	502	540	595	650	771	832
HVL 980	980	98.0	121	180	247	299	329	370	441	476	497	523	563	620	677	804	867
HVL 1000	1000	100	123	183	252	305	336	377	450	486	508	534	574	633	691	821	885
HVL 1030	1030	103	127	189	260	314	346	389	463	500	523	550	592	652	712	845	912
HVL 1080	1080	108	133	198	272	329	362	408	486	524	548	576	620	684	747	886	956
HVL 1120	1120	112	138	205	282	342	376	423	504	544	568	598	643	709	774	919	991
HVL 1180	1180	118	145	216	297	360	396	445	531	573	599	630	678	747	816	968	1044
HVL 1220	1220	122	150	224	307	372	409	461	549	592	619	651	701	772	843	1001	1080
HVL 1260	1260	126	155	231	318	384	423	476	567	612	639	673	724	798	871	1034	1115
HVL 1300	1300	130	160	238	328	396	436	491	585	631	660	694	747	823	899	1067	1151
HVL 1350	1350	135	166	248	340	412	453	510	607	656	685	721	775	855	933	1108	1195
HVL 1400	1400	140	172	257	353	427	470	528	630	680	711	747	804	886	968	1149	1239
HVL 1450	1450	145	179	266	365	442	487	547	652	704	736	774	833	918	1002	1190	1283
HVL 1500	1500	150	185	275	378	457	503	566	675	728	761	801	862	950	1037	1231	1328
HVL 1540	1540	154	190	282	388	470	517	581	693	748	782	822	885	975	1065	1264	1363
HVL 1600	1600	160	197	293	403	488	537	604	720	777	812	854	919	1013	1106	1313	1416
HVL 1680	1680	168	207	308	423	512	564	634	756	816	853	897	965	1064	1161	1379	1487

Performance data of HVL range in Amperes

After long term float charge of fully charged cells at +20°C ±5°C (+68°F ± 9°F)

Final Cell Voltage: 1.05 V

Cell Type	C_5 Ah	Hours							Minutes					Seconds			
		10	8	5	3	2	1.5	1	30	20	15	10	5	60	30	5	1
HVL 15	15	1.56	1.91	2.91	4.29	5.53	6.39	7.82	10.2	11.4	12.0	13.0	14.8	16.4	17.9	22.1	24.6
HVL 24	24	2.50	3.06	4.66	6.86	8.85	10.2	12.5	16.3	18.2	19.3	20.8	23.7	26.2	28.7	35.3	39.4
HVL 30	30	3.12	3.82	5.82	8.58	11.1	12.8	15.6	20.4	22.8	24.1	26.1	29.7	32.7	35.9	44.2	49.2
HVL 40	40	4.16	5.10	7.76	11.4	14.8	17.0	20.9	27.2	30.3	32.1	34.7	39.6	43.7	47.8	58.9	65.6
HVL 47	47	4.89	5.99	9.12	13.4	17.3	20.0	24.5	32.0	35.6	37.7	40.8	46.5	51.3	56.2	69.2	77.1
HVL 55	55	5.72	7.01	10.7	15.7	20.3	23.4	28.7	37.4	41.7	44.1	47.8	54.4	60.0	65.8	81.0	90.2
HVL 62	62	6.39	7.87	12.3	18.1	22.6	25.6	29.2	34.8	37.9	39.1	41.2	45.3	47.9	51.9	61.7	67.4
HVL 69	69	7.12	8.75	13.6	20.1	25.2	28.5	32.5	38.8	42.2	43.5	45.9	50.4	53.3	57.8	68.7	75.0
HVL 75	75	7.73	9.52	14.8	21.9	27.4	31.0	35.4	42.1	45.9	47.3	49.9	54.8	57.9	62.8	74.6	81.5
HVL 85	85	8.77	10.8	16.8	24.8	31.0	35.1	40.1	47.8	52.0	53.6	56.5	62.1	65.7	71.2	84.6	92.3
HVL 95	95	9.80	12.1	18.8	27.7	34.7	39.3	44.8	53.4	58.1	59.9	63.2	69.4	73.4	79.6	94.5	103
HVL 110	110	11.3	14.0	21.7	32.1	40.2	45.5	51.9	61.8	67.3	69.3	73.2	80.3	85.0	92.1	109	119
HVL 125	125	12.9	15.9	24.7	36.5	45.6	51.7	58.9	70.2	76.4	78.8	83.2	91.3	96.6	105	124	136
HVL 140	140	14.4	17.8	27.7	40.9	51.1	57.9	66.0	78.7	85.6	88.2	93.1	102	108	117	139	152
HVL 160	160	16.5	20.3	31.6	46.7	58.4	66.1	75.4	89.9	97.8	101	106	117	124	134	159	174
HVL 170	170	17.5	21.6	33.6	49.6	62.1	70.3	80.2	95.5	104	107	113	124	131	142	169	185
HVL 185	185	19.1	23.5	36.6	54.0	67.5	76.5	87.2	104	113	117	123	135	143	155	184	201
HVL 210	210	21.7	26.6	41.5	61.3	76.7	86.8	99.0	118	128	132	140	153	162	176	209	228
HVL 225	225	23.2	28.5	44.5	65.7	82.1	93.0	106	126	138	142	150	164	174	188	224	244
HVL 235	235	24.2	29.8	46.4	68.6	85.8	97.1	111	132	144	148	156	172	182	197	234	255
HVL 255	255	26.3	32.4	50.4	74.4	93.1	105	120	143	156	161	170	186	197	214	254	277
HVL 270	270	27.8	34.3	53.4	78.8	98.6	112	127	152	165	170	180	197	209	226	269	293
HVL 280	280	28.9	35.5	55.3	81.7	102	116	132	157	171	176	186	204	216	235	279	304
HVL 300	300	30.9	38.1	59.3	87.6	110	124	141	169	183	189	200	219	232	251	299	326
HVL 325	325	33.5	41.2	64.2	94.9	119	134	153	183	199	205	216	237	251	272	323	353
HVL 350	350	36.1	44.4	69.2	102	128	145	165	197	214	221	233	256	270	293	348	380
HVL 375	375	38.7	47.6	74.1	109	137	155	177	211	229	236	249	274	290	314	373	407
HVL 400	400	41.3	50.8	79.0	117	146	165	189	225	245	252	266	292	309	335	398	435
HVL 420	420	43.3	53.3	83.0	123	153	174	198	236	257	265	279	307	324	352	418	456
HVL 450	450	46.4	57.1	88.9	131	164	186	212	253	275	284	299	329	348	377	448	489
HVL 470	470	48.5	59.6	92.9	137	172	194	222	264	287	296	313	343	363	394	468	511
HVL 495	495	51.0	62.8	97.8	144	181	205	233	278	303	312	329	361	382	415	493	538
HVL 515	515	53.1	65.3	102	150	188	213	243	289	315	324	343	376	398	431	512	559
HVL 540	540	55.7	68.5	107	158	197	223	255	303	330	340	359	394	417	452	537	587
HVL 560	560	57.8	71.1	111	163	204	231	264	315	342	353	373	409	433	469	557	608
HVL 585	585	60.3	74.2	116	171	214	242	276	329	358	369	389	427	452	490	582	635
HVL 610	610	62.9	77.4	121	178	223	252	288	343	373	384	406	445	471	511	607	663
HVL 630	630	65.0	79.9	124	184	230	260	297	354	385	397	419	460	487	528	627	684
HVL 650	650	67.0	82.5	128	190	237	269	306	365	397	410	432	475	502	544	647	706
HVL 675	675	69.6	85.6	133	197	246	279	318	379	413	425	449	493	521	565	672	733

Performance data of HVL range in Amperes

After long term float charge of fully charged cells at +20°C ±5°C (+68°F ± 9°F)

Final Cell Voltage: 1.05 V

Cell Type	C_5 Ah	Hours							Minutes					Seconds			
		10	8	5	3	2	1.5	1	30	20	15	10	5	60	30	5	1
HVL 700	700	72.2	88.8	138	204	256	289	330	393	428	441	466	511	541	586	697	760
HVL 725	725	74.8	92.0	143	212	265	300	342	407	443	457	482	529	560	607	721	788
HVL 750	750	77.3	95.2	148	219	274	310	354	421	459	473	499	548	579	628	746	815
HVL 775	775	79.9	98.3	153	226	283	320	365	435	474	488	516	566	599	649	771	842
HVL 800	800	82.5	102	158	234	292	331	377	450	489	504	532	584	618	670	796	869
HVL 840	840	86.6	107	166	245	307	347	396	472	514	529	559	613	649	704	836	912
HVL 870	870	89.7	110	172	254	318	360	410	489	532	548	579	635	672	729	866	945
HVL 890	890	91.8	113	176	260	325	368	420	500	544	561	592	650	688	745	886	967
HVL 910	910	93.8	115	180	266	332	376	429	511	556	573	605	664	703	762	905	989
HVL 940	940	96.9	119	186	274	343	389	443	528	575	592	625	686	726	787	935	1021
HVL 980	980	101	124	194	286	358	405	462	551	599	617	652	715	757	821	975	1065
HVL 1000	1000	103	127	198	292	365	413	472	562	611	630	665	730	773	838	995	1086
HVL 1030	1030	106	131	204	301	376	426	486	579	630	649	685	752	796	863	1025	1119
HVL 1080	1080	111	137	213	315	394	446	509	607	660	680	719	788	834	905	1075	1173
HVL 1120	1120	116	142	221	327	409	463	528	629	685	706	745	818	865	938	1114	1217
HVL 1180	1180	122	150	233	344	431	488	556	663	722	743	785	861	912	988	1174	1282
HVL 1220	1220	126	155	241	356	445	504	575	685	746	769	812	891	942	1022	1214	1325
HVL 1260	1260	130	160	249	368	460	521	594	708	770	794	838	920	973	1055	1254	1369
HVL 1300	1300	134	165	257	379	475	537	613	730	795	819	865	949	1004	1089	1294	1412
HVL 1350	1350	139	171	267	394	493	558	637	759	825	851	898	986	1043	1131	1343	1467
HVL 1400	1400	144	178	277	409	511	579	660	787	856	882	931	1022	1082	1173	1393	1521
HVL 1450	1450	150	184	287	423	529	599	684	815	887	914	965	1059	1120	1214	1443	1575
HVL 1500	1500	155	190	296	438	548	620	707	843	917	945	998	1095	1159	1256	1493	1629
HVL 1540	1540	159	195	304	449	562	637	726	865	942	970	1025	1124	1190	1290	1532	1673
HVL 1600	1600	165	203	316	467	584	661	754	899	978	1008	1064	1168	1236	1340	1592	1738
HVL 1680	1680	173	213	332	490	613	694	792	944	1027	1058	1118	1226	1298	1407	1672	1825

Performance data of HVL range in Amperes

After long term float charge of fully charged cells at +20°C ±5°C (+68°F ± 9°F)

Final Cell Voltage: 1.00 V

Cell Type	C_5 Ah	Hours							Minutes					Seconds			
		10	8	5	3	2	1.5	1	30	20	15	10	5	60	30	5	1
HVL 15	15	1.56	1.93	3.00	4.80	6.41	7.60	9.30	12.1	13.6	14.4	15.4	17.1	19.5	21.3	26.2	29.3
HVL 24	24	2.50	3.09	4.80	7.68	10.3	12.2	14.9	19.4	21.8	23.1	24.7	27.3	31.3	34.1	41.9	46.9
HVL 30	30	3.12	3.86	6.00	9.60	12.8	15.2	18.6	24.3	27.2	28.9	30.9	34.1	39.1	42.6	52.3	58.6
HVL 40	40	4.16	5.15	8.00	12.8	17.1	20.3	24.8	32.3	36.3	38.5	41.1	45.5	52.1	56.8	69.8	78.1
HVL 47	47	4.89	6.05	9.40	15.0	20.1	23.8	29.1	38.0	42.6	45.2	48.3	53.5	61.2	66.7	82.0	91.8
HVL 55	55	5.72	7.08	11.0	17.6	23.5	27.9	34.1	44.5	49.9	52.9	56.6	62.6	71.6	78.1	96.0	107.4
HVL 62	62	6.44	7.98	12.4	20.0	26.0	29.8	35.0	42.5	46.3	49.1	51.7	57.0	57.0	62.5	73.7	80.8
HVL 69	69	7.17	8.89	13.8	22.2	28.9	33.1	38.9	47.4	51.5	54.6	57.5	63.4	63.5	69.5	82.0	89.9
HVL 75	75	7.79	9.66	15.0	24.1	31.4	36.0	42.3	51.5	56.0	59.4	62.5	69.0	69.0	75.6	89.2	97.7
HVL 85	85	8.83	10.9	17.0	27.4	35.6	40.8	47.9	58.3	63.5	67.3	70.9	78.2	78.2	85.6	101	111
HVL 95	95	9.87	12.2	19.0	30.6	39.8	45.6	53.6	65.2	71.0	75.2	79.2	87.4	87.4	95.7	113	124
HVL 110	110	11.4	14.2	22.0	35.4	46.1	52.8	62.0	75.5	82.2	87.1	91.7	101	101	111	131	143
HVL 125	125	13.0	16.1	25.0	40.2	52.4	60.0	70.5	85.8	93.4	99.0	104	115	115	126	149	163
HVL 140	140	14.6	18.0	28.0	45.1	58.7	67.2	79.0	96.1	105	111	117	129	129	141	166	182
HVL 160	160	16.6	20.6	32.0	51.5	67.0	76.8	90.2	110	120	127	133	147	147	161	190	208
HVL 170	170	17.7	21.9	34.0	54.7	71.2	81.6	95.9	117	127	135	142	156	156	171	202	221
HVL 185	185	19.2	23.8	37.0	59.6	77.5	88.8	104	127	138	147	154	170	170	186	220	241
HVL 210	210	21.8	27.0	42.0	67.6	88.0	101	118	144	157	166	175	193	193	212	250	274
HVL 225	225	23.4	29.0	45.0	72.4	94.3	108	127	154	168	178	188	207	207	227	267	293
HVL 235	235	24.4	30.3	47.0	75.7	98.5	113	133	161	176	186	196	216	216	237	279	306
HVL 255	255	26.5	32.8	51.0	82.1	107	122	144	175	190	202	213	234	235	257	303	332
HVL 270	270	28.1	34.8	54.0	86.9	113	130	152	185	202	214	225	248	248	272	321	352
HVL 280	280	29.1	36.1	56.0	90.1	117	134	158	192	209	222	233	257	258	282	333	365
HVL 300	300	31.2	38.6	60.0	96.6	126	144	169	206	224	238	250	276	276	302	357	391
HVL 325	325	33.8	41.9	65.0	105	136	156	183	223	243	257	271	299	299	327	386	423
HVL 350	350	36.4	45.1	70.0	113	147	168	197	240	261	277	292	322	322	353	416	456
HVL 375	375	39.0	48.3	75.0	121	157	180	211	257	280	297	313	345	345	378	446	488
HVL 400	400	41.6	51.5	80.0	129	168	192	226	275	299	317	334	368	368	403	476	521
HVL 420	420	43.7	54.1	84.0	135	176	202	237	288	314	333	350	386	386	423	499	547
HVL 450	450	46.8	57.9	90.0	145	189	216	254	309	336	356	375	414	414	453	535	586
HVL 470	470	48.8	60.5	94.0	151	197	226	265	323	351	372	392	432	432	474	559	612
HVL 495	495	51.4	63.7	99.0	159	207	238	279	340	370	392	413	455	455	499	588	645
HVL 515	515	53.5	66.3	103	166	216	247	290	353	385	408	429	474	474	519	612	671
HVL 540	540	56.1	69.5	108	174	226	259	305	371	403	428	450	497	497	544	642	703
HVL 560	560	58.2	72.1	112	180	235	269	316	384	418	443	467	515	515	564	666	729
HVL 585	585	60.8	75.3	117	188	245	281	330	401	437	463	488	538	538	589	695	762
HVL 610	610	63.4	78.6	122	196	256	293	344	419	456	483	509	561	561	615	725	795
HVL 630	630	65.5	81.1	126	203	264	302	355	432	471	499	525	579	580	635	749	821
HVL 650	650	67.6	83.7	130	209	272	312	367	446	485	515	542	598	598	655	773	847
HVL 675	675	70.2	86.9	135	217	283	324	381	463	504	535	563	621	621	680	802	879

Performance data of HVL range in Amperes

After long term float charge of fully charged cells at +20°C ±5°C (+68°F ± 9°F)

Final Cell Voltage: 1.00 V

Cell Type	C_5 Ah	Hours							Minutes					Seconds			
		10	8	5	3	2	1.5	1	30	20	15	10	5	60	30	5	1
HVL 700	700	72.8	90.1	140	225	293	336	395	480	523	554	584	644	644	705	832	912
HVL 725	725	75.3	93.4	145	233	304	348	409	498	541	574	605	667	667	730	862	944
HVL 750	750	77.9	96.6	150	241	314	360	423	515	560	594	625	690	690	756	892	977
HVL 775	775	80.5	99.8	155	249	325	372	437	532	579	614	646	713	713	781	921	1009
HVL 800	800	83.1	103	160	258	335	384	451	549	598	634	667	736	736	806	951	1042
HVL 840	840	87.3	108	168	270	352	403	474	576	627	665	700	772	773	846	999	1094
HVL 870	870	90.4	112	174	280	365	418	491	597	650	689	725	800	800	877	1034	1133
HVL 890	890	92.5	115	178	287	373	427	502	611	665	705	742	818	819	897	1058	1159
HVL 910	910	94.6	117	182	293	381	437	513	624	680	721	759	837	837	917	1082	1185
HVL 940	940	97.7	121	188	303	394	451	530	645	702	744	784	864	865	947	1117	1224
HVL 980	980	102	126	196	315	411	470	553	673	732	776	817	901	902	987	1165	1277
HVL 1000	1000	104	129	200	322	419	480	564	686	747	792	834	920	920	1008	1189	1303
HVL 1030	1030	107	133	206	332	432	494	581	707	769	816	859	947	948	1038	1224	1342
HVL 1080	1080	112	139	216	348	453	518	609	741	807	855	901	993	994	1088	1284	1407
HVL 1120	1120	116	144	224	361	469	538	632	769	837	887	934	1030	1030	1128	1331	1459
HVL 1180	1180	123	152	236	380	494	566	666	810	881	934	984	1085	1086	1189	1403	1537
HVL 1220	1220	127	157	244	393	511	586	688	837	911	966	1017	1122	1122	1229	1450	1589
HVL 1260	1260	131	162	252	406	528	605	711	865	941	998	1051	1159	1159	1269	1498	1641
HVL 1300	1300	135	167	260	418	545	624	733	892	971	1030	1084	1195	1196	1310	1545	1693
HVL 1350	1350	140	174	270	435	566	648	761	926	1008	1069	1126	1241	1242	1360	1605	1758
HVL 1400	1400	146	180	280	451	587	672	790	961	1046	1109	1167	1287	1288	1411	1664	1824
HVL 1450	1450	151	187	290	467	608	696	818	995	1083	1148	1209	1333	1334	1461	1724	1889
HVL 1500	1500	156	193	300	483	629	720	846	1029	1120	1188	1251	1379	1380	1511	1783	1954
HVL 1540	1540	160	198	308	496	645	739	869	1057	1150	1220	1284	1416	1417	1552	1831	2006
HVL 1600	1600	166	206	320	515	670	768	902	1098	1195	1267	1334	1471	1472	1612	1902	2084
HVL 1680	1680	175	216	336	541	704	806	948	1153	1255	1330	1401	1545	1546	1693	1997	2188

Battery Arrangement as per Standard Rack Designs

(NORMAL ARRANGEMENT)																
Container size reference	1TIER								2TIER							
	1STEP		2STEP		3STEP		4STEP		1STEP		2STEP		3STEP		4STEP	
	W	H	W	H	W	H	W	H	W	H	W	H	W	H	W	H
B21-1 / B22-1 B23-1 / B24-1			318	703	467	818	616	933			318	1225	467	1425	616	1675
B41-1 / B41B-1 B42-1 / B42A-1 B43-1 / B45-1 B44-1 / B41B-2 B42A-2 / B42-2			440	844	650	959	860	1074			440	1550	650	1800	860	2050

(CROSS - WISE ARRANGEMENT)																
Container size reference	1TIER								2TIER							
	1STEP		2STEP		3STEP		4STEP		1STEP		2STEP		3STEP		4STEP	
	W	H	W	H	W	H	W	H	W	H	W	H	W	H	W	H
B41B-3			534	844	791	959					534	1550	791	1800		
B41B-4			658	844	977	959					658	1550	977	1800		
B41B-5			804	844							804	1550				
B41-2			440	844	650	959	860	1074			440	1550	650	1800	860	2050
B41-3			586	844	869	959					586	1550	869	1800		
B41-4			754	844							754	1550				
B41-5			924	844					472	1320	924	1550				
B41-6	557	729	1094	844					557	1320						

(All dimensions in mm. Height is including cells)

Evaluation of Rack Length:

Length of Rack = (X + 5) x No. of block cells in a row (for all block cells)

Where X = Length of cell / block cell for length-wise mounting (HVM 7-345 / HVL 15-450)
= Width of cell / block cell for cross-wise mounting (HVM 370 & above / HVL 470 above)

The value of length should be rounded-off to nearest to 100 mm and 5 mm should be added to arrive at the final length of rack.

HVM 7 - HVM 220
HVL 15 - HVL 270

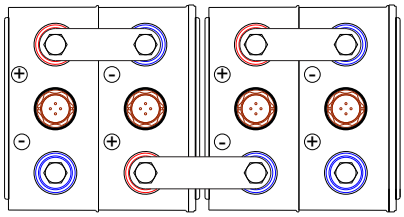

Normal Arrangement

HVM 245 - HVM 345
HVL 280 - HVL 450

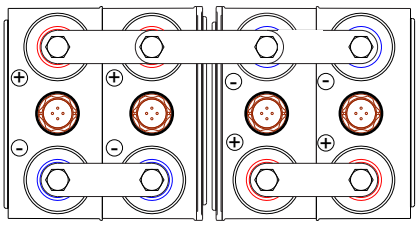

Normal Arrangement

HVM 370 - HVM 1340
HVL 470 - HVL 1680

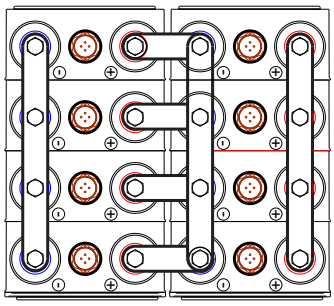

Cross - wise Arrangement

Battery Rack Arrangement

SINGLE TIER RACK
1STEP 1TIER RACK

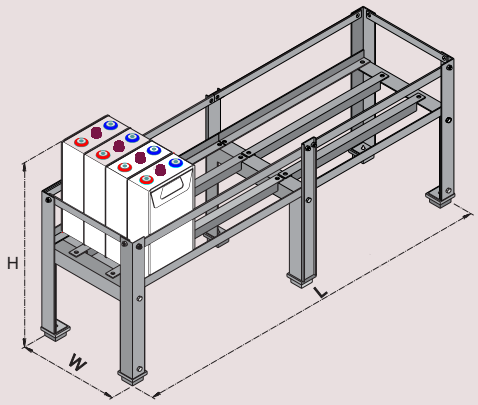

SINGLE TIER RACK
2STEP 1TIER RACK

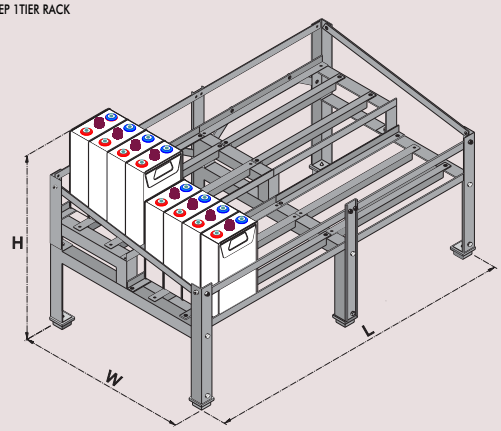

SINGLE TIER RACK
3STEP 1TIER RACK

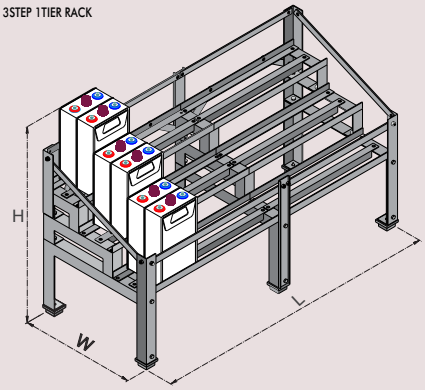

SINGLE TIER RACK
4STEP 1TIER RACK

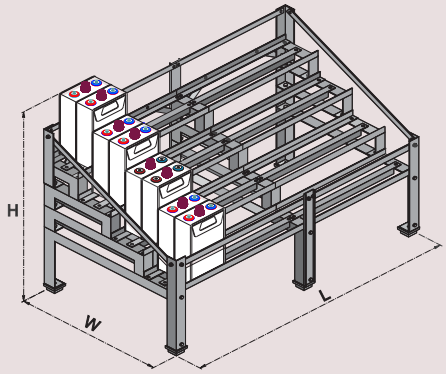

TWO TIER RACK
1STEP 2TIER RACK

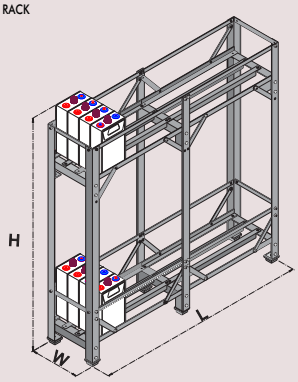

TWO TIER RACK
2STEP 2TIER RACK

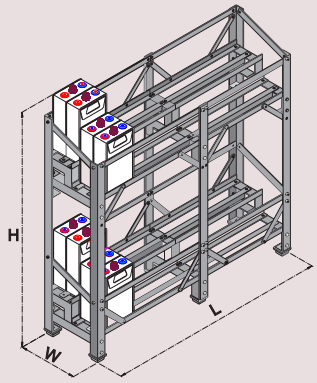

TWO TIER RACK
3STEP 2TIER RACK

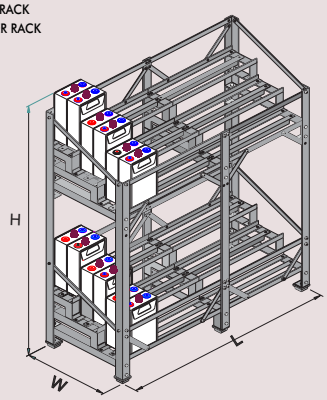

TWO TIER RACK
4STEP 2TIER RACK

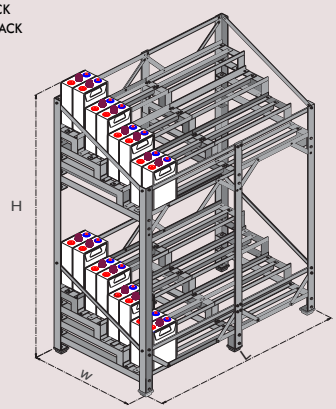

Certifications

IRIS Certification

intertek

BUREAU VERITAS Certification ISO 14001 — UKAS QUALITY MANAGEMENT

BUREAU VERITAS Certification ISO 9001 — UKAS QUALITY MANAGEMENT

BUREAU VERITAS Certification OHSAS 18001 — UKAS QUALITY MANAGEMENT

HBL Engineering Limited
Road No. 10, Banjara Hills,
Hyderabad 500034, TG INDIA
www.hbl.in
aero@hbl.in
+91 9989313601

HBL America Inc.
712, Brook Street
Rocky Hill, CT 06067
www.hblbatteries.com
aero@hblbatteries.com
+1 860 257 9800

Corp Comms / Ventpro /Aug. 2025