HBL

NCPP

Nickel Cadmium Pocket Plate Batteries

Single Cell Catalogue

Introduction:

HBL's Nickel Cadmium Pocket Plate battery designs are based on the superior pocket plate technology.

A fully integrated modern factory, supported by strong process management and quality controls makes HBL one of the best Nickel Cadmium battery production facilities in the world.

HBL's single cells are offered in 1.2 voltage per cell and in wide capacity range.

NCPP single cell range is designed to comply with IS 10918 & IEC 60623.

Construction

The internal mechanical structure is made of nickel plated steel making it highly rugged and capable of withstanding mechanical abuses. The active materials are encapsulated between specially designed folded steel strips, which are perforated on both sides. This design increases the effective surface area by 30% which in turn results in effective utilization of active material and makes the battery more efficient.

Single cells use special polypropylene separator system, which is chemically inert and highly immune to wear and tear. Cells come in tough, shock resistant, fusion welded polypropylene containers and lids. A unique flame arresting flip type vent cap in the cells prevents any unusual event and electrolyte contamination.

Single cells are supplied either in filled condition (charged or discharged) or dry & discharged condition with inter-cell connectors, cable connectors, associated hardware and accessories that are required for normal operation and maintenance. Powder coated Mild Steel racks to house the batteries can be provided as an option.

Cut-view of cell:

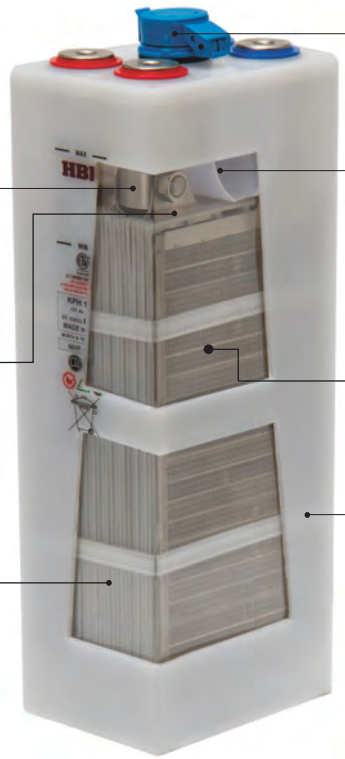

Flame Arresting Vent Cap
Prevents propagation of external flame in to the cell & electrolyte contamination

Terminal Arrangement
Nickel-plated components (tab, stud, nut, post) provide excellent electrical conductivity

Splash Guard
Prevents electrolyte splashing and possible short-circuit caused by external objects accidentally falling into the cell

Plate Groups
Bolted construction under controlled torque conditions to withstand severe vibrations

Pocket Plate
Made of double perforated steel strips, encapsulating the active materials

Translucent Polypropylene Container
Fusion welded to lids, makes the cell mechanically sturdy and facilitates visual inspection of electrolyte level

Polypropylene Grid Separator
Separates the plates and insulates the frames from each other and allows free electrolyte

Benefits

- High reliability
- Long float life - 20 years+ at 20° C for standby applications
- Long shelf life - 5 years+ for the cells supplied in dry condition & 1 year in filled condition
- Quick charging - More than 90 % capacity available within 6 hours of charging
- Low internal resistance - For enhanced battery performance
- Resistant to mechanical & electrical abuses - Making it ideal for deployment in harsh environments
- Wide operating temperature range (-20°C to +50°C)
- Application specific designs (KPH, KPM & KPL)
- Easy installation & low maintenance
- Best TCO (Total Cost of Ownership) for demanding application needs
- No risk of sudden death failure

Capacity Range

High Discharge - KPH:

- Thin plates with more plate surface area
- For high discharge applications with less than 1 hour backup time requirements
- 10 Ah to 265 Ah
- 33 standard cell models to choose from

Medium Discharge - KPM:

- Optimized plate thickness
- For medium discharge applications, between 1 to 3 hours backup time requirements which involves high and long discharges
- 10 Ah to 395 Ah
- 42 standard cell models to choose from

Long Discharge - KPL:

- Thick plates with more amount of active material
- For long discharge applications, with more than 3 hours backup time requirements
- 11 Ah to 480 Ah
- 41standard cell models to choose from

Applications

Single cell range is specially designed for industrial markets considering the reliability, cost-optimization and low-maintenance requirements for the following applications and segments

- Fire alarm systems
- Signaling and Telecommunications
- Solar Photovoltaic
- Instrumentation & Process control
- Switchgear protection
- Emergency lighting
- Switchyard
- UPS
- Genset starting
- Diesel Locomotive cranking
- Electromagnetic lifters (EOT crane)

Battery Charging

Following are recommended charge conditions:

Commissioning Charge:

- Constant current charge of 10 hours at 0.2 C_5 A (20 amps for 100 Ah battery)

Quick Charging:

- Constant current charge at 0.4 C_5 A for first 2.5 hours followed by 0.2 C_5 A for next 2.5 hours

Charging in Operation:

The recommended charging voltages for continuous parallel operation, with occasional battery discharges:

Two Level Charging:

- Float level:

  1.40 V/cell for KPH & KPM

  1.40 to 1.42 V/cell for KPL

  Float charging current: 1 to 2 mA per Ah

- *Boost level:

  1.45 to 1.70 V/cell for KPH & KPM

  1.47 to 1.70 V/cell for KPL

  Current limit: 0.2C_5 A

Single Level Charging:

- 1.43 – 1.50 V/cell

(may increase water consumption)

* Refer charge curves at page#34

(A higher voltage will keep the battery at high state of charge)

H Range

Cell dimensions and weight details

Cell type	Capacity (C_5 Ah)	Cell dimensions in mm			Approx. weight per cell in kg	Cell connection bolt size	Container size reference	Approx. reserve electrolyte cc/cell
		Height	Width	Length				
KPH 10 P	10	229	86	46	1.45	M6	S1	100
KPH 12 P	12				1.50			
KPH 16 P	16	229	86	61	1.90	M6	S2	130
KPH 20 P	20	239	134	44	2.15	M6	S3	140
KPH 24 P	24	289	134	59	3.20	M10	S4	200
KPH 30 P	30				3.55			
KPH 35 P	35				3.70			
KPH 40 P	40	374	134	59	4.50	M10	S4A	200
KPH 45 P	45				4.80			
KPH 50 P	50				5.00			
KPH 57 P	57	374	134	74	6.30	M10	S5	420
KPH 63 P	63				6.50			
KPH 69 P	69				6.70			
KPH 76 P	76				6.80			
KPH 80 P	80				6.85			
KPH 85 P	85	391	134	101	9.40	2 x M10	S6	580
KPH 94 P	94				9.70			
KPH 100 P	100				9.80			
KPH 110 P	110				10.2			
KPH 120 P	120				10.5			
KPH 130 P	130	417	159	106	12.5	2 x M10	S7	740
KPH 140 P	140				13.0			
KPH 145 P	145				13.2			
KPH 155 P	155				13.6			
KPH 160 P	160	417	159	138	14.2	2 x M10	S7A	960
KPH 170 P	170				14.5			
KPH 180 P	180				14.9			
KPH 190 P	190				15.2			
KPH 210 P	210	443	163	166	20.0	2 X M10	S8	1210
KPH 230 P	230				20.8			
KPH 240 P	240				21.6			
KPH 255 P	255				22.0			
KPH 265 P	265				22.4			

Performance data of KPH range in Amperes

After fully charged with constant current charging at +20°C ±5°C (+68°F ± 9°F)

Final Cell Voltage: 1.14 V

Cell Type	C_5 Ah	Hours							Minutes					Seconds			
		10	8	5	3	2	1.5	1	30	20	15	10	5	60	30	5	1
KPH 10 P	10	0.94	1.19	1.86	3.03	4.43	5.73	8.10	12.1	14.8	16.7	19.6	24.8	39.1	45.2	56.4	59.1
KPH 12 P	12	1.13	1.43	2.23	3.63	5.32	6.88	9.72	14.5	17.7	20.0	23.5	29.7	46.9	54.3	67.7	70.9
KPH 16 P	16	1.51	1.90	2.97	4.85	7.09	9.17	13.0	19.4	23.7	26.7	31.3	39.7	62.5	72.4	90.2	94.6
KPH 20 P	20	1.89	2.38	3.71	6.06	8.86	11.5	16.2	24.2	29.6	33.4	39.1	49.6	78.1	90.5	113	118
KPH 24 P	24	2.26	2.86	4.45	7.27	10.6	13.8	19.4	29.0	35.5	40.1	47.0	59.5	93.8	109	135	142
KPH 30 P	30	2.83	3.57	5.57	9.09	13.3	17.2	24.3	36.3	44.4	50.1	58.7	74.4	117	136	169	177
KPH 35 P	35	3.30	4.17	6.50	10.6	15.5	20.1	28.4	42.4	51.7	58.4	68.5	86.7	137	158	197	207
KPH 40 P	40	3.77	4.76	7.56	12.2	17.7	22.9	32.4	48.4	59.2	66.8	78.3	99.3	156	181	226	237
KPH 45 P	45	4.24	5.36	8.51	13.7	20.0	25.8	36.5	54.4	66.6	75.1	88.1	112	175	203	254	266
KPH 50 P	50	4.71	5.95	9.45	15.3	22.2	28.7	40.5	60.5	74.0	83.5	97.9	124	195	226	282	296
KPH 57 P	57	5.37	6.78	10.8	17.4	25.3	32.7	46.2	69.0	84.3	95.2	112	141	222	258	321	337
KPH 63 P	63	5.94	7.50	11.9	19.2	27.9	36.1	51.1	76.2	93.2	105	123	156	246	285	355	373
KPH 69 P	69	6.50	8.21	13.0	21.0	30.6	39.6	55.9	83.5	102	115	135	171	269	312	389	408
KPH 76 P	76	7.16	9.05	14.4	23.2	33.7	43.6	61.6	92.0	112	127	149	189	296	344	429	449
KPH 80 P	80	7.54	9.52	15.1	24.4	35.5	45.9	64.8	96.8	118	134	157	199	312	362	451	473
KPH 85 P	85	8.01	10.1	16.1	25.9	37.7	48.7	68.9	103	126	142	166	211	331	384	479	503
KPH 94 P	94	8.86	11.2	17.8	28.7	41.7	53.9	76.2	114	139	157	184	233	366	425	530	556
KPH 100 P	100	9.43	11.9	18.9	30.5	44.4	57.3	81.0	121	148	167	196	248	390	452	564	591
KPH 110 P	110	10.4	13.1	20.8	33.6	48.8	63.1	89.2	133	163	184	215	273	429	497	620	650
KPH 120 P	120	11.3	14.3	22.7	36.6	53.2	68.8	97.3	145	178	200	235	298	468	543	677	710
KPH 130 P	130	12.3	15.5	24.6	39.7	57.5	74.4	104	154	187	209	242	306	461	528	623	645
KPH 140 P	140	13.2	16.7	26.5	42.7	61.9	80.1	112	165	201	225	261	329	497	568	671	695
KPH 145 P	145	13.7	17.3	27.4	44.2	64.1	83.0	116	171	208	233	270	341	514	589	695	719
KPH 155 P	155	14.6	18.4	29.3	47.3	68.5	88.7	124	183	222	250	289	365	550	629	743	769
KPH 160 P	160	15.1	19.0	30.3	48.8	70.8	91.6	128	189	230	258	298	376	568	650	767	794
KPH 170 P	170	16.0	20.2	32.1	51.9	75.2	97.3	136	201	244	274	317	400	603	690	815	843
KPH 180 P	180	17.0	21.4	34.0	54.9	79.6	103	144	213	258	290	335	424	639	731	863	893
KPH 190 P	190	17.9	22.6	35.9	58.0	84.0	109	152	225	273	306	354	447	674	771	911	943
KPH 210 P	210	19.8	25.0	39.7	64.1	92.9	120	168	248	301	338	391	494	745	853	1007	1042
KPH 230 P	230	21.7	27.4	43.5	70.2	102	132	184	272	330	370	429	541	816	934	1103	1141
KPH 240 P	240	22.6	28.6	45.4	73.2	106	137	192	284	344	386	447	565	851	974	1151	1191
KPH 255 P	255	24.0	30.3	48.2	77.8	113	146	204	301	366	411	475	600	905	1035	1223	1265
KPH 265 P	265	25.0	31.5	50.1	80.9	117	152	212	313	380	427	494	624	940	1076	1270	1315

Performance data of KPH range in Amperes

After fully charged with constant current charging at +20°C ±5°C (+68°F ± 9°F)

Final Cell Voltage: 1.10 V

Cell Type	C_5 Ah	Hours							Minutes					Seconds			
		10	8	5	3	2	1.5	1	30	20	15	10	5	60	30	5	1
KPH 10 P	10	0.97	1.23	1.92	3.15	4.63	6.06	8.69	14.5	17.7	20.1	23.6	29.7	45.5	52.8	64.3	69.0
KPH 12 P	12	1.17	1.48	2.31	3.77	5.56	7.27	10.4	17.4	21.2	24.2	28.3	35.7	54.6	63.4	77.2	82.8
KPH 16 P	16	1.56	1.97	3.07	5.03	7.41	9.69	13.9	23.2	28.3	32.2	37.8	47.5	72.8	84.5	103	110
KPH 20 P	20	1.95	2.46	3.84	6.29	9.26	12.1	17.4	29.0	35.4	40.3	47.2	59.4	91.0	106	129	138
KPH 24 P	24	2.34	2.95	4.61	7.55	11.1	14.5	20.9	34.8	42.4	48.3	56.7	71.3	109	127	154	166
KPH 30 P	30	2.92	3.69	5.76	9.44	13.9	18.2	26.1	43.5	53.0	60.4	70.8	89.1	137	158	193	207
KPH 35 P	35	3.41	4.31	6.72	11.0	16.2	21.2	30.4	50.7	61.9	70.5	82.7	104	159	185	225	241
KPH 40 P	40	3.90	4.92	7.80	12.8	18.5	24.2	34.8	57.9	70.8	80.9	94.5	119	182	211	257	275
KPH 45 P	45	4.39	5.53	8.77	14.4	20.9	27.3	39.1	65.2	79.6	91.0	106	134	205	237	290	309
KPH 50 P	50	4.87	6.15	9.75	16.0	23.2	30.3	43.5	72.4	88.5	101	118	149	228	264	322	344
KPH 57 P	57	5.56	7.01	11.1	18.2	26.4	34.5	49.6	82.6	101	115	135	169	260	301	367	392
KPH 63 P	63	6.14	7.75	12.3	20.2	29.2	38.2	54.8	91.2	112	127	149	187	287	332	405	433
KPH 69 P	69	6.73	8.49	13.5	22.1	32.0	41.8	60.0	99.9	122	140	163	205	314	364	444	474
KPH 76 P	76	7.41	9.35	14.8	24.3	35.2	46.0	66.1	110	135	154	180	226	346	401	489	522
KPH 80 P	80	7.80	9.84	15.6	25.6	37.1	48.5	69.6	116	142	162	189	238	364	422	515	550
KPH 85 P	85	8.28	10.5	16.6	27.2	39.4	51.5	73.9	123	150	172	201	253	387	448	547	584
KPH 94 P	94	9.16	11.6	18.3	30.1	43.6	56.9	81.7	136	166	190	222	279	428	496	605	646
KPH 100 P	100	9.75	12.3	19.5	32.0	46.3	60.6	86.9	145	177	202	236	297	455	527	644	687
KPH 110 P	110	10.7	13.5	21.4	35.2	51.0	66.6	95.6	159	195	223	260	327	501	580	708	756
KPH 120 P	120	11.7	14.8	23.4	38.4	55.6	72.7	104	174	212	243	283	357	546	633	772	824
KPH 130 P	130	12.7	16.0	25.4	41.6	60.3	78.9	113	186	223	254	294	362	541	616	733	770
KPH 140 P	140	13.6	17.2	27.3	44.8	65.0	84.9	122	200	240	273	317	390	582	664	789	829
KPH 145 P	145	14.1	17.8	28.3	46.4	67.3	88.0	126	207	249	283	328	404	603	687	818	859
KPH 155 P	155	15.1	19.1	30.2	49.6	71.9	94.0	135	221	266	303	351	432	645	735	874	918
KPH 160 P	160	15.6	19.7	31.2	51.2	74.2	97.1	139	229	275	312	362	446	666	758	902	948
KPH 170 P	170	16.6	20.9	33.2	54.4	78.9	103	148	243	292	332	385	473	707	806	959	1007
KPH 180 P	180	17.5	22.1	35.1	57.6	83.5	109	157	257	309	351	408	501	749	853	1015	1066
KPH 190 P	190	18.5	23.4	37.1	60.8	88.2	115	165	271	326	371	430	529	790	900	1071	1125
KPH 210 P	210	20.5	25.8	41.0	67.2	97.5	127	183	300	361	410	476	585	874	995	1184	1244
KPH 230 P	230	22.4	28.3	44.9	73.6	107	140	200	329	395	449	521	641	957	1090	1297	1362
KPH 240 P	240	23.4	29.5	46.8	76.8	111	146	209	343	412	468	544	668	998	1137	1353	1421
KPH 255 P	255	24.9	31.4	49.8	81.6	118	155	222	364	438	498	577	710	1061	1209	1438	1510
KPH 265 P	265	25.8	32.6	51.7	84.8	123	161	231	379	455	517	600	738	1102	1256	1494	1569

Performance data of KPH range in Amperes

After fully charged with constant current charging at +20°C ±5°C (+68°F ± 9°F)

Final Cell Voltage: 1.05 V

Cell Type	C_5 Ah	Hours							Minutes					Seconds			
		10	8	5	3	2	1.5	1	30	20	15	10	5	60	30	5	1
KPH 10 P	10	1.00	1.25	1.97	3.25	4.80	6.31	9.12	16.2	21.2	23.9	28.3	35.5	54.2	61.6	76.1	82.0
KPH 12 P	12	1.20	1.50	2.36	3.90	5.76	7.57	10.9	19.5	25.4	28.7	33.9	42.6	65.0	73.9	91.3	98.4
KPH 16 P	16	1.60	2.00	3.15	5.20	7.68	10.1	14.6	26.0	33.9	38.3	45.2	56.8	86.7	98.6	122	131
KPH 20 P	20	2.00	2.50	3.94	6.50	9.60	12.6	18.2	32.5	42.3	47.8	56.5	71.0	108	123	152	164
KPH 24 P	24	2.40	2.99	4.73	7.80	11.5	15.1	21.9	39.0	50.8	57.4	67.8	85.2	130	148	183	197
KPH 30 P	30	3.00	3.74	5.91	9.75	14.4	18.9	27.4	48.7	63.5	71.7	84.8	107	163	185	228	246
KPH 35 P	35	3.50	4.37	6.90	11.4	16.8	22.1	31.9	56.8	74.1	83.7	98.9	124	190	216	266	287
KPH 40 P	40	4.00	4.98	7.88	13.0	19.2	25.2	36.4	65.4	84.7	95.7	113	142	217	246	304	327
KPH 45 P	45	4.50	5.60	8.87	14.6	21.6	28.3	40.9	73.6	95.3	108	127	160	245	277	342	368
KPH 50 P	50	5.00	6.22	9.86	16.2	24.0	31.5	45.5	81.8	106	120	141	178	272	308	380	409
KPH 57 P	57	5.69	7.10	11.2	18.5	27.4	35.9	51.9	93.2	121	136	161	203	310	351	434	467
KPH 63 P	63	6.29	7.84	12.4	20.5	30.2	39.6	57.3	103	133	151	178	224	342	388	479	516
KPH 69 P	69	6.89	8.59	13.6	22.4	33.1	43.4	62.8	113	146	165	195	245	375	425	525	565
KPH 76 P	76	7.59	9.46	15.0	24.7	36.5	47.8	69.2	124	161	182	215	270	413	468	578	622
KPH 80 P	80	7.99	9.96	15.8	26.0	38.4	50.3	72.8	131	169	191	226	284	435	493	609	655
KPH 85 P	85	8.49	10.6	16.8	27.6	40.8	53.5	77.3	139	180	203	240	302	462	524	647	696
KPH 94 P	94	9.39	11.7	18.5	30.5	45.1	59.1	85.5	154	199	225	266	334	511	579	715	770
KPH 100 P	100	9.99	12.4	19.7	32.5	48.0	62.9	91.0	164	212	239	283	355	543	616	761	819
KPH 110 P	110	11.0	13.7	21.7	35.7	52.8	69.2	100	180	233	263	311	391	598	678	837	901
KPH 120 P	120	12.0	14.9	23.7	39.0	57.6	75.5	109	196	254	287	339	426	652	739	913	982
KPH 130 P	130	13.0	16.2	25.6	42.2	62.4	81.8	119	211	269	302	353	437	637	719	867	905
KPH 140 P	140	14.0	17.4	27.6	45.5	67.2	88.1	128	227	290	325	380	471	686	774	933	975
KPH 145 P	145	14.5	18.1	28.6	47.1	69.6	91.3	132	235	300	337	394	488	711	802	967	1009
KPH 155 P	155	15.5	19.3	30.6	50.3	74.5	97.6	141	252	321	360	421	521	760	857	1033	1079
KPH 160 P	160	16.0	19.9	31.5	52.0	76.9	101	146	260	331	372	435	538	784	885	1067	1114
KPH 170 P	170	17.0	21.2	33.5	55.2	81.7	107	155	276	352	395	462	572	833	940	1133	1183
KPH 180 P	180	18.0	22.4	35.5	58.4	86.5	113	164	292	373	418	489	605	882	995	1200	1253
KPH 190 P	190	19.0	23.7	37.5	61.7	91.3	120	173	308	393	442	516	639	931	1051	1267	1323
KPH 210 P	210	21.0	26.2	41.4	68.2	101	132	191	341	435	488	570	706	1029	1161	1400	1462
KPH 230 P	230	23.0	28.7	45.3	74.7	110	145	210	373	476	535	625	773	1127	1272	1533	1601
KPH 240 P	240	24.0	29.9	47.3	77.9	115	151	219	390	497	558	652	807	1176	1327	1600	1671
KPH 255 P	255	25.5	31.8	50.3	82.8	122	161	233	414	528	593	693	858	1250	1410	1700	1775
KPH 265 P	265	26.5	33.0	52.2	86.0	127	167	242	430	549	616	720	891	1299	1465	1767	1845

Performance data of KPH range in Amperes

After fully charged with constant current charging at +20°C ±5°C (+68°F ± 9°F)

Final Cell Voltage: 1.00 V

Cell Type	C_5 Ah	Hours							Minutes					Seconds			
		10	8	5	3	2	1.5	1	30	20	15	10	5	60	30	5	1
KPH 10 P	10	1.01	1.26	2.00	3.29	4.89	6.44	9.40	17.2	23.2	27.2	32.4	41.2	61.4	70.1	88.3	96.8
KPH 12 P	12	1.21	1.52	2.40	3.95	5.86	7.73	11.3	20.7	27.8	32.7	38.8	49.4	73.7	84.1	106	116
KPH 16 P	16	1.61	2.02	3.20	5.27	7.82	10.3	15.0	27.6	37.1	43.6	51.8	65.9	98.3	112	141	155
KPH 20 P	20	2.01	2.53	4.00	6.58	9.77	12.9	18.8	34.5	46.4	54.5	64.7	82.3	123	140	177	194
KPH 24 P	24	2.42	3.03	4.80	7.90	11.7	15.5	22.6	41.4	55.7	65.4	77.7	98.8	147	168	212	232
KPH 30 P	30	3.02	3.79	6.00	9.87	14.7	19.3	28.2	51.7	69.6	81.7	97.1	123	184	210	265	290
KPH 35 P	35	3.52	4.42	7.00	11.5	17.1	22.5	32.9	60.3	81.2	95.3	113	144	215	245	309	339
KPH 40 P	40	4.03	5.05	8.00	13.2	19.5	25.7	37.6	69.0	92.8	109	129	165	246	281	353	387
KPH 45 P	45	4.53	5.68	9.00	14.9	22.0	29.0	42.3	77.7	104	123	145	185	277	316	397	436
KPH 50 P	50	5.04	6.31	10.0	16.5	24.4	32.2	47.0	86.3	116	136	162	206	307	351	441	484
KPH 57 P	57	5.74	7.20	11.4	18.8	27.8	36.7	53.6	98.4	132	155	184	235	350	400	503	552
KPH 63 P	63	6.34	7.96	12.6	20.8	30.8	40.5	59.3	109	146	172	204	259	387	442	556	610
KPH 69 P	69	6.95	8.71	13.8	22.8	33.7	44.4	64.9	119	160	188	223	284	424	484	609	668
KPH 76 P	76	7.65	9.60	15.2	25.1	37.1	48.9	71.5	131	176	207	246	313	467	533	671	736
KPH 80 P	80	8.06	10.1	16.0	26.4	39.1	51.5	75.3	138	186	218	259	329	492	561	706	775
KPH 85 P	85	8.56	10.7	17.0	28.1	41.5	54.7	80.0	147	197	232	275	350	522	596	750	823
KPH 94 P	94	9.47	11.9	18.8	31.0	45.9	60.5	88.4	162	218	256	304	387	578	659	830	910
KPH 100 P	100	10.1	12.6	20.0	33.0	48.8	64.4	94.1	173	232	273	323	412	614	702	883	968
KPH 110 P	110	11.1	13.9	22.0	36.3	53.7	70.8	103	190	255	300	356	453	676	772	971	1065
KPH 120 P	120	12.1	15.2	24.0	39.6	58.6	77.2	113	207	278	327	388	494	737	842	1059	1162
KPH 130 P	130	13.1	16.4	26.0	42.9	63.6	83.7	122	222	299	345	406	506	732	826	1004	1068
KPH 140 P	140	14.1	17.7	28.0	46.2	68.5	90.2	132	239	322	371	438	545	788	889	1081	1150
KPH 145 P	145	14.6	18.3	29.0	47.9	70.9	93.4	137	248	333	385	453	564	816	921	1120	1191
KPH 155 P	155	15.6	19.6	31.0	51.2	75.8	99.8	146	265	356	411	484	603	872	985	1197	1273
KPH 160 P	160	16.1	20.2	32.0	52.8	78.2	103	151	274	368	424	500	623	900	1016	1236	1314
KPH 170 P	170	17.1	21.5	34.0	56.1	83.1	109	160	291	391	451	531	662	957	1080	1313	1397
KPH 180 P	180	18.1	22.7	36.0	59.4	88.0	116	170	308	414	477	563	700	1013	1144	1390	1479
KPH 190 P	190	19.1	24.0	38.0	62.7	92.9	122	179	325	437	504	594	739	1069	1207	1468	1561
KPH 210 P	210	21.1	26.5	42.0	69.3	103	135	198	359	483	557	656	817	1182	1334	1622	1725
KPH 230 P	230	23.2	29.0	46.0	75.9	112	148	217	393	529	610	719	895	1294	1461	1777	1890
KPH 240 P	240	24.2	30.3	48.0	79.2	117	155	226	410	552	637	750	934	1351	1525	1854	1972
KPH 255 P	255	25.7	32.2	51.0	84.2	125	164	240	436	586	676	797	992	1435	1620	1970	2095
KPH 265 P	265	26.7	33.5	53.0	87.5	130	171	250	453	609	703	828	1031	1491	1684	2047	2177

Performance data of KPH range in Amperes

After fully charged with constant current charging at +20°C ±5°C (+68°F ± 9°F)

Final Cell Voltage: 0.85 V

Cell Type	C_5 Ah	Seconds				
		90	60	30	5	1
KPH 10 P	10	75.8	83.9	95.5	123	134
KPH 12 P	12	90.9	101	115	148	161
KPH 16 P	16	121	134	153	197	215
KPH 20 P	20	152	168	191	246	268
KPH 24 P	24	182	201	229	295	322
KPH 30 P	30	227	252	287	369	403
KPH 35 P	35	265	294	334	431	470
KPH 40 P	40	303	336	382	492	537
KPH 45 P	45	341	378	430	554	604
KPH 50 P	50	379	420	478	615	671
KPH 57 P	57	432	478	544	701	765
KPH 63 P	63	477	529	602	775	845
KPH 69 P	69	523	579	659	849	926
KPH 76 P	76	576	638	726	935	1020
KPH 80 P	80	606	671	764	984	1074
KPH 85 P	85	644	713	812	1046	1141
KPH 94 P	94	712	789	898	1157	1262
KPH 100 P	100	758	839	955	1230	1342
KPH 110 P	110	833	923	1051	1353	1476
KPH 120 P	120	909	1007	1146	1477	1610
KPH 130 P	130	921	1009	1127	1389	1517
KPH 140 P	140	992	1087	1213	1496	1633
KPH 145 P	145	1028	1126	1257	1550	1692
KPH 155 P	155	1098	1204	1343	1656	1808
KPH 160 P	160	1134	1242	1387	1710	1867
KPH 170 P	170	1205	1320	1473	1817	1983
KPH 180 P	180	1276	1398	1560	1924	2100
KPH 190 P	190	1347	1475	1647	2030	2217
KPH 210 P	210	1488	1631	1820	2244	2450
KPH 230 P	230	1630	1786	1993	2458	2683
KPH 240 P	240	1701	1864	2080	2565	2800
KPH 255 P	255	1807	1980	2210	2725	2975
KPH 265 P	265	1878	2058	2297	2832	3092

Final Cell Voltage: 0.65 V

Cell type	C_5 Ah	Seconds				
		90	60	30	5	1
KPH 10 P	10	98.1	110	126	161	180
KPH 12 P	12	118	131	151	193	216
KPH 16 P	16	157	175	201	257	288
KPH 20 P	20	196	219	251	322	359
KPH 24 P	24	236	263	301	386	431
KPH 30 P	30	294	329	377	483	539
KPH 35 P	35	343	383	439	563	629
KPH 40 P	40	393	438	502	643	719
KPH 45 P	45	442	493	565	724	809
KPH 50 P	50	491	548	628	804	899
KPH 57 P	57	559	625	715	917	1024
KPH 63 P	63	618	690	791	1013	1132
KPH 69 P	69	677	756	866	1110	1240
KPH 76 P	76	746	833	954	1223	1366
KPH 80 P	80	785	877	1004	1287	1438
KPH 85 P	85	834	931	1067	1367	1528
KPH 94 P	94	922	1030	1180	1512	1689
KPH 100 P	100	981	1096	1255	1609	1797
KPH 110 P	110	1079	1205	1381	1770	1977
KPH 120 P	120	1178	1315	1506	1930	2157
KPH 130 P	130	1210	1338	1504	1886	2039
KPH 140 P	140	1303	1441	1620	2031	2196
KPH 145 P	145	1349	1493	1677	2104	2275
KPH 155 P	155	1442	1596	1793	2249	2431
KPH 160 P	160	1489	1647	1851	2322	2510
KPH 170 P	170	1582	1750	1967	2467	2667
KPH 180 P	180	1675	1853	2082	2612	2824
KPH 190 P	190	1768	1956	2198	2757	2980
KPH 210 P	210	1954	2162	2429	3047	3294
KPH 230 P	230	2140	2368	2661	3337	3608
KPH 240 P	240	2233	2471	2776	3482	3765
KPH 255 P	255	2373	2625	2950	3700	4000
KPH 265 P	265	2466	2728	3066	3845	4157

Performance data of KPH range in Amperes

After long term float charge of fully charged cells at +20°C ±5°C (+68°F ± 9°F)

Final Cell Voltage: 1.14 V

Cell Type	C_5 Ah	Hours							Minutes					Seconds			
		10	8	5	3	2	1.5	1	30	20	15	10	5	60	30	5	1
KPH 10 P	10	0.94	1.19	1.85	3.02	4.43	5.73	7.75	10.7	12.4	14.1	16.2	20.0	27.6	32.0	39.9	46.5
KPH 12 P	12	1.13	1.43	2.23	3.63	5.32	6.88	9.30	12.9	14.9	16.9	19.4	23.9	33.1	38.4	47.9	55.8
KPH 16 P	16	1.51	1.90	2.97	4.84	7.09	9.17	12.4	17.2	19.9	22.5	25.9	31.9	44.1	51.2	63.9	74.4
KPH 20 P	20	1.89	2.38	3.71	6.05	8.86	11.5	15.5	21.5	24.8	28.2	32.4	39.9	55.1	64.0	79.8	93.0
KPH 24 P	24	2.26	2.86	4.45	7.26	10.6	13.8	18.6	25.8	29.8	33.8	38.9	47.9	66.2	76.8	95.8	112
KPH 30 P	30	2.83	3.57	5.56	9.07	13.3	17.2	23.3	32.2	37.2	42.2	48.6	59.9	82.7	96.0	120	140
KPH 35 P	35	3.30	4.16	6.49	10.6	15.5	20.1	27.1	37.6	43.4	49.3	56.7	69.8	96.5	112	140	163
KPH 40 P	40	3.77	4.76	7.56	12.2	17.7	22.9	30.9	42.9	49.7	55.6	63.0	77.1	111	128	160	168
KPH 45 P	45	4.24	5.36	8.51	13.7	20.0	25.8	34.8	48.3	55.9	62.6	70.9	86.7	124	144	180	189
KPH 50 P	50	4.71	5.95	9.45	15.3	22.2	28.7	38.7	53.7	62.1	69.5	78.8	96.3	138	160	200	210
KPH 57 P	57	5.37	6.78	10.8	17.4	25.3	32.7	44.1	61.2	70.8	79.3	89.8	110	158	183	228	240
KPH 63 P	63	5.94	7.50	11.9	19.2	27.9	36.1	48.7	67.6	78.3	87.6	99.2	121	174	202	252	265
KPH 69 P	69	6.50	8.21	13.0	21.0	30.6	39.6	53.4	74.1	85.7	95.9	109	133	191	221	276	290
KPH 76 P	76	7.16	9.05	14.4	23.2	33.7	43.6	58.8	81.6	94.4	106	120	146	210	243	304	319
KPH 80 P	80	7.54	9.52	15.1	24.4	35.5	45.9	61.9	85.9	99.4	111	126	154	221	256	320	336
KPH 85 P	85	8.01	10.1	16.1	25.9	37.7	48.7	65.8	91.2	106	118	134	164	235	272	340	357
KPH 94 P	94	8.86	11.2	17.8	28.7	41.7	53.9	72.7	101	117	131	148	181	260	301	376	395
KPH 100 P	100	9.43	11.9	18.9	30.5	44.4	57.3	77.4	107	124	139	158	193	277	320	400	420
KPH 110 P	110	10.4	13.1	20.8	33.6	48.8	63.1	85.1	118	137	153	173	212	304	352	440	462
KPH 120 P	120	11.3	14.3	22.7	36.6	53.2	68.8	92.8	129	149	167	189	231	332	384	480	504
KPH 130 P	130	12.3	15.5	24.6	39.6	57.5	74.4	99.3	136	161	181	205	250	329	377	443	459
KPH 140 P	140	13.2	16.7	26.5	42.7	61.9	80.1	107	147	174	195	220	270	354	406	477	494
KPH 145 P	145	13.7	17.3	27.4	44.2	64.1	82.9	111	152	180	202	228	279	366	420	494	512
KPH 155 P	155	14.6	18.4	29.3	47.3	68.5	88.7	118	163	192	216	244	299	392	449	529	547
KPH 160 P	160	15.1	19.0	30.2	48.8	70.7	91.5	122	168	198	223	252	308	404	464	546	565
KPH 170 P	170	16.0	20.2	32.1	51.8	75.1	97.2	130	178	211	236	268	327	430	493	580	600
KPH 180 P	180	17.0	21.4	34.0	54.9	79.6	103	138	189	223	250	283	347	455	522	614	635
KPH 190 P	190	17.9	22.6	35.9	57.9	84.0	109	145	199	235	264	299	366	480	551	648	671
KPH 210 P	210	19.8	25.0	39.7	64.0	92.8	120	160	220	260	292	331	405	531	609	716	741
KPH 230 P	230	21.7	27.4	43.5	70.1	102	132	176	241	285	320	362	443	581	666	784	812
KPH 240 P	240	22.6	28.6	45.4	73.2	106	137	183	252	297	334	378	462	607	695	818	847
KPH 255 P	255	24.0	30.3	48.2	77.8	113	146	195	267	316	355	402	491	644	739	869	900
KPH 265 P	265	25.0	31.5	50.1	80.8	117	152	203	278	328	369	417	510	670	768	904	935

Performance data of KPH range in Amperes

After long term float charge of fully charged cells at +20°C ±5°C (+68°F ± 9°F)

Final Cell Voltage: 1.10 V

Cell Type	C_5 Ah	Hours							Minutes					Seconds			
		10	8	5	3	2	1.5	1	30	20	15	10	5	60	30	5	1
KPH 10 P	10	0.97	1.23	1.92	3.15	4.63	6.06	8.70	13.4	15.6	17.5	19.9	24.7	34.4	39.8	50.0	52.6
KPH 12 P	12	1.17	1.48	2.30	3.78	5.56	7.27	10.4	16.1	18.8	21.0	23.9	29.6	41.2	47.7	60.0	63.2
KPH 16 P	16	1.56	1.97	3.07	5.04	7.41	9.69	13.9	21.5	25.0	28.0	31.9	39.5	55.0	63.6	80.0	84.2
KPH 20 P	20	1.95	2.46	3.84	6.30	9.26	12.1	17.4	26.8	31.3	35.0	39.9	49.4	68.7	79.5	100	105
KPH 24 P	24	2.34	2.95	4.61	7.56	11.1	14.5	20.9	32.2	37.5	42.0	47.9	59.2	82.5	95.4	120	126
KPH 30 P	30	2.92	3.69	5.76	9.44	13.9	18.2	26.1	40.2	46.9	52.5	59.8	74.1	103	119	150	158
KPH 35 P	35	3.41	4.31	6.72	11.0	16.2	21.2	30.4	46.9	54.7	61.3	69.8	86.4	120	139	175	184
KPH 40 P	40	3.90	4.92	7.80	12.8	18.5	24.2	34.8	53.6	64.0	72.1	81.7	101	138	160	196	220
KPH 45 P	45	4.39	5.53	8.77	14.4	20.9	27.3	39.1	60.3	72.0	81.2	91.9	113	156	180	220	247
KPH 50 P	50	4.87	6.15	9.75	16.0	23.2	30.3	43.5	67.0	80.0	90.2	102	126	173	200	245	274
KPH 57 P	57	5.56	7.01	11.1	18.2	26.4	34.5	49.6	76.4	91.2	103	116	143	197	228	279	313
KPH 63 P	63	6.14	7.75	12.3	20.2	29.2	38.2	54.8	84.4	101	114	129	158	218	252	309	346
KPH 69 P	69	6.73	8.49	13.5	22.1	32.0	41.8	60.0	92.5	110	124	141	174	239	276	338	379
KPH 76 P	76	7.41	9.35	14.8	24.3	35.2	46.1	66.1	102	122	137	155	191	263	304	372	417
KPH 80 P	80	7.80	9.84	15.6	25.6	37.1	48.5	69.6	107	128	144	163	201	277	320	392	439
KPH 85 P	85	8.28	10.5	16.6	27.2	39.4	51.5	73.9	114	136	153	174	214	294	340	416	467
KPH 94 P	94	9.16	11.6	18.3	30.1	43.6	57.0	81.8	126	150	170	192	236	325	376	460	516
KPH 100 P	100	9.75	12.3	19.5	32.0	46.3	60.6	87.0	134	160	180	204	252	346	400	490	549
KPH 110 P	110	10.7	13.5	21.4	35.2	51.0	66.7	95.7	147	176	198	225	277	381	440	539	604
KPH 120 P	120	11.7	14.8	23.4	38.4	55.6	72.7	104	161	192	216	245	302	415	480	588	659
KPH 130 P	130	12.7	16.0	25.4	41.6	60.3	78.9	113	172	201	226	255	307	412	469	558	586
KPH 140 P	140	13.6	17.2	27.3	44.8	65.0	85.0	122	185	216	243	274	330	444	505	601	631
KPH 145 P	145	14.1	17.8	28.3	46.4	67.3	88.0	126	192	224	252	284	342	460	523	622	654
KPH 155 P	155	15.1	19.1	30.2	49.6	71.9	94.1	135	205	240	270	304	366	491	559	665	699
KPH 160 P	160	15.6	19.7	31.2	51.2	74.2	97.1	139	211	247	278	313	378	507	577	687	722
KPH 170 P	170	16.6	20.9	33.2	54.4	78.9	103	148	225	263	296	333	401	539	613	730	767
KPH 180 P	180	17.5	22.1	35.1	57.6	83.5	109	157	238	278	313	352	425	571	649	773	812
KPH 190 P	190	18.5	23.4	37.1	60.8	88.2	115	165	251	294	330	372	448	602	685	816	857
KPH 210 P	210	20.5	25.8	41.0	67.2	97.4	127	183	277	325	365	411	496	666	757	901	947
KPH 230 P	230	22.4	28.3	44.9	73.6	107	140	200	304	355	400	450	543	729	829	987	1037
KPH 240 P	240	23.4	29.5	46.8	76.8	111	146	209	317	371	417	470	567	761	865	1030	1082
KPH 255 P	255	24.9	31.3	49.7	81.6	118	155	222	337	394	443	499	602	808	919	1095	1150
KPH 265 P	265	25.8	32.6	51.7	84.8	123	161	230	350	410	461	519	626	840	956	1137	1195

Performance data of KPH range in Amperes

After long term float charge of fully charged cells at +20°C ±5°C (+68°F ± 9°F)

Final Cell Voltage: 1.05 V

Cell Type	C_5 Ah	Hours							Minutes					Seconds			
		10	8	5	3	2	1.5	1	30	20	15	10	5	60	30	5	1
KPH 10 P	10	1.00	1.25	1.97	3.24	4.80	6.30	9.12	16.2	20.2	22.4	26.5	31.6	43.6	50.2	61.4	66.3
KPH 12 P	12	1.20	1.49	2.36	3.89	5.76	7.56	10.9	19.5	24.3	26.9	31.8	37.9	52.3	60.3	73.6	79.5
KPH 16 P	16	1.60	1.99	3.15	5.19	7.67	10.1	14.6	26.0	32.3	35.8	42.4	50.6	69.8	80.4	98.2	106
KPH 20 P	20	2.00	2.49	3.94	6.49	9.59	12.6	18.2	32.5	40.4	44.8	53.0	63.2	87.2	100	123	133
KPH 24 P	24	2.40	2.99	4.73	7.79	11.5	15.1	21.9	39.0	48.5	53.8	63.6	75.9	105	121	147	159
KPH 30 P	30	3.00	3.74	5.91	9.73	14.4	18.9	27.4	48.7	60.7	67.2	79.5	94.8	131	151	184	199
KPH 35 P	35	3.50	4.36	6.89	11.4	16.8	22.1	31.9	56.8	70.8	78.4	92.8	111	153	176	215	232
KPH 40 P	40	4.00	4.98	7.88	13.0	19.2	25.2	36.4	65.4	84.6	92.3	109	130	175	200	247	265
KPH 45 P	45	4.50	5.60	8.87	14.6	21.6	28.3	40.9	73.6	95.1	104	123	146	197	225	278	298
KPH 50 P	50	5.00	6.22	9.85	16.2	24.0	31.5	45.5	81.8	106	115	137	162	219	250	309	331
KPH 57 P	57	5.69	7.10	11.2	18.5	27.4	35.9	51.9	93.2	121	132	156	185	250	285	352	377
KPH 63 P	63	6.29	7.84	12.4	20.5	30.2	39.6	57.3	103	133	145	172	204	276	315	389	417
KPH 69 P	69	6.89	8.59	13.6	22.4	33.1	43.4	62.8	113	146	159	189	224	303	345	426	457
KPH 76 P	76	7.59	9.46	15.0	24.7	36.5	47.8	69.1	124	161	175	208	246	333	380	469	503
KPH 80 P	80	7.99	9.96	15.8	26.0	38.4	50.3	72.8	131	169	185	219	259	351	400	494	530
KPH 85 P	85	8.49	10.6	16.7	27.6	40.8	53.5	77.3	139	180	196	233	276	373	425	525	563
KPH 94 P	94	9.39	11.7	18.5	30.5	45.1	59.1	85.5	154	199	217	257	305	412	470	580	623
KPH 100 P	100	9.99	12.4	19.7	32.5	48.0	62.9	91.0	164	211	231	274	324	439	500	617	662
KPH 110 P	110	11.0	13.7	21.7	35.7	52.8	69.2	100	180	233	254	301	357	483	550	679	728
KPH 120 P	120	12.0	14.9	23.6	39.0	57.6	75.5	109	196	254	277	328	389	526	600	741	795
KPH 130 P	130	13.0	16.2	25.6	42.2	62.4	81.8	119	211	257	291	343	399	517	583	704	734
KPH 140 P	140	14.0	17.4	27.6	45.5	67.2	88.1	128	227	277	314	369	429	557	628	758	790
KPH 145 P	145	14.5	18.1	28.6	47.1	69.6	91.3	132	235	287	325	382	445	577	651	785	818
KPH 155 P	155	15.5	19.3	30.6	50.3	74.5	97.6	141	252	306	347	409	475	616	696	839	875
KPH 160 P	160	16.0	19.9	31.6	52.0	76.9	101	146	260	316	359	422	491	636	718	866	903
KPH 170 P	170	17.0	21.2	33.5	55.2	81.7	107	155	276	336	381	448	522	676	763	920	959
KPH 180 P	180	18.0	22.4	35.5	58.5	86.5	113	164	292	356	403	474	552	716	808	975	1016
KPH 190 P	190	19.0	23.7	37.5	61.7	91.3	120	173	308	376	426	501	583	755	853	1029	1072
KPH 210 P	210	21.0	26.2	41.4	68.2	101	132	191	341	415	471	554	644	835	942	1137	1185
KPH 230 P	230	23.0	28.7	45.4	74.7	110	145	210	373	455	516	606	706	915	1032	1245	1298
KPH 240 P	240	24.0	29.9	47.3	78.0	115	151	219	390	474	538	633	736	954	1077	1299	1354
KPH 255 P	255	25.5	31.8	50.3	82.8	122	161	233	414	504	572	672	782	1014	1144	1381	1439
KPH 265 P	265	26.5	33.0	52.3	86.1	127	167	242	430	524	594	699	813	1054	1189	1435	1495

Performance data of KPH range in Amperes

After long term float charge of fully charged cells at +20°C ±5°C (+68°F ± 9°F)

Final Cell Voltage: 1.00 V

Cell Type	C_5 Ah	Hours							Minutes					Seconds			
		10	8	5	3	2	1.5	1	30	20	15	10	5	60	30	5	1
KPH 10 P	10	1.01	1.26	2.00	3.29	4.89	6.44	9.40	17.2	23.2	26.4	31.1	38.6	51.9	58.9	74.4	81.4
KPH 12 P	12	1.21	1.52	2.40	3.95	5.86	7.73	11.3	20.7	27.8	31.7	37.3	46.3	62.3	70.7	89.3	97.6
KPH 16 P	16	1.61	2.02	3.20	5.26	7.82	10.3	15.0	27.6	37.1	42.3	49.8	61.7	83.1	94.2	119	130
KPH 20 P	20	2.01	2.53	4.00	6.58	9.77	12.9	18.8	34.5	46.4	52.9	62.2	77.2	104	118	149	163
KPH 24 P	24	2.42	3.03	4.80	7.90	11.7	15.5	22.6	41.4	55.6	63.5	74.7	92.6	125	141	179	195
KPH 30 P	30	3.02	3.79	6.00	9.87	14.7	19.3	28.2	51.7	69.6	79.3	93.3	116	156	177	223	244
KPH 35 P	35	3.52	4.42	7.00	11.5	17.1	22.5	32.9	60.3	81.1	92.5	109	135	182	206	260	285
KPH 40 P	40	4.03	5.05	8.00	13.2	19.5	25.7	37.6	69.0	92.8	108	128	159	208	236	297	325
KPH 45 P	45	4.53	5.68	9.00	14.9	22.0	29.0	42.3	77.6	104	121	144	179	234	265	334	366
KPH 50 P	50	5.04	6.31	10.0	16.5	24.4	32.2	47.0	86.2	116	135	160	199	260	295	371	407
KPH 57 P	57	5.74	7.20	11.4	18.8	27.8	36.7	53.6	98.3	132	154	183	227	296	336	423	464
KPH 63 P	63	6.34	7.95	12.6	20.8	30.8	40.5	59.2	109	146	170	202	251	327	371	467	512
KPH 69 P	69	6.95	8.71	13.8	22.8	33.7	44.4	64.9	119	160	186	221	275	358	406	512	561
KPH 76 P	76	7.65	9.60	15.2	25.1	37.1	48.9	71.5	131	176	205	244	302	395	448	563	618
KPH 80 P	80	8.06	10.1	16.0	26.4	39.1	51.5	75.2	138	186	216	257	318	415	471	593	651
KPH 85 P	85	8.56	10.7	17.0	28.1	41.5	54.7	79.9	147	197	229	273	338	441	501	630	691
KPH 94 P	94	9.47	11.9	18.8	31.0	45.9	60.5	88.4	162	218	253	302	374	488	554	697	765
KPH 100 P	100	10.1	12.6	20.0	33.0	48.8	64.3	94.0	172	232	270	321	398	519	589	741	813
KPH 110 P	110	11.1	13.9	22.0	36.3	53.7	70.8	103	190	255	297	353	438	571	648	816	895
KPH 120 P	120	12.1	15.2	24.0	39.6	58.6	77.2	113	207	278	323	385	477	623	707	890	976
KPH 130 P	130	13.1	16.4	26.0	42.9	63.6	83.7	122	222	299	342	405	491	618	695	845	899
KPH 140 P	140	14.1	17.7	28.0	46.2	68.5	90.2	132	239	322	369	436	528	666	749	910	968
KPH 145 P	145	14.6	18.3	29.0	47.9	70.9	93.4	137	248	333	382	451	547	689	776	943	1003
KPH 155 P	155	15.6	19.6	31.0	51.2	75.8	99.8	146	265	356	408	482	585	737	829	1008	1072
KPH 160 P	160	16.1	20.2	32.0	52.8	78.2	103	151	274	368	421	498	604	761	856	1041	1107
KPH 170 P	170	17.1	21.5	34.0	56.1	83.1	109	160	291	391	448	529	642	808	909	1106	1176
KPH 180 P	180	18.1	22.7	36.0	59.4	88.0	116	170	308	414	474	560	679	856	963	1171	1245
KPH 190 P	190	19.1	24.0	38.0	62.7	92.9	122	179	325	437	500	591	717	903	1016	1236	1314
KPH 210 P	210	21.1	26.5	42.0	69.3	103	135	198	359	483	553	654	793	999	1123	1366	1453
KPH 230 P	230	23.2	29.0	46.0	75.9	112	148	217	393	529	606	716	868	1094	1230	1496	1591
KPH 240 P	240	24.2	30.3	48.0	79.2	117	155	226	410	552	632	747	906	1141	1284	1561	1660
KPH 255 P	255	25.7	32.2	51.0	84.2	125	164	240	436	586	672	794	963	1213	1364	1658	1764
KPH 265 P	265	26.7	33.5	53.0	87.5	130	171	250	453	609	698	825	1000	1260	1417	1723	1833

M Range

Cell dimensions and weight details

Cell type	Capacity (C_5 Ah)	Cell dimensions in mm			Approx. weight per cell in kg	Cell connection bolt size	Container size reference	Approx. reserve electrolyte cc/cell
		Height	Width	Length				
KPM 10 P	10	229	86	46	1.3	M6	S1	100
KPM 13 P	13	229	86	61	1.5	M6	S2	130
KPM 19 P	19	239	134	44	1.9	M6	S3	140
KPM 25 P	25	289	134	59	2.4	M10	S4	200
KPM 32 P	32				2.7			
KPM 38 P	38				3.2			
KPM 43 P	43				3.8			
KPM 50 P	50				4.0			
KPM 54 P	54				4.2			
KPM 60 P	60	374	134	59	4.7	M10	S4A	200
KPM 64 P	64				5.1			
KPM 70 P	70				5.6			
KPM 75 P	75	374	134	74	5.9	M10	S5	420
KPM 80 P	80				6.2			
KPM 90 P	90				6.4			
KPM 95 P	95				6.6			
KPM 105 P	105				7.0			
KPM 112 P	112				7.3			
KPM 120 P	120				7.6			
KPM 128 P	128	391	134	101	9.3	2 x M10	S6	580
KPM 136 P	136				9.6			
KPM 150 P	150				9.9			
KPM 158 P	158				10.3			
KPM 164 P	164				10.5			
KPM 170 P	170	417	159	106	10.8	2 x M10	S7	740
KPM 180 P	180				11.3			
KPM 188 P	188				11.7			
KPM 200 P	200				12.2			
KPM 212 P	212				12.6			
KPM 220 P	220				12.9			
KPM 235 P	235				13.2			
KPM 250 P	250				13.6			
KPM 260 P	260	417	159	138	14.5	2 x M10	S7A	960
KPM 270 P	270				14.9			
KPM 280 P	280				15.4			
KPM 300 P	300				16.0			
KPM 320 P	320	443	163	166	20.0	2 X M10	S8	1210
KPM 330 P	330				20.2			
KPM 345 P	345				20.6			
KPM 354 P	354				21.0			
KPM 370 P	370				21.5			
KPM 395 P	395				22.0			

Performance data of KPM range in Amperes

After fully charged with constant current charging at +20°C ±5°C (+68°F ± 9°F)

Final Cell Voltage: 1.14 V

Cell Type	C_5 Ah	Hours							Minutes					Seconds			
		10	8	5	3	2	1.5	1	30	20	15	10	5	60	30	5	1
KPM 10 P	10	0.97	1.20	1.89	3.00	4.21	5.16	6.31	8.52	9.90	11.1	12.6	15.2	21.8	24.4	28.5	29.9
KPM 13 P	13	1.26	1.56	2.45	3.90	5.47	6.71	8.20	11.1	12.9	14.4	16.4	19.8	28.3	31.7	37.1	38.8
KPM 19 P	19	1.84	2.28	3.58	5.70	7.99	9.80	12.0	16.2	18.8	21.1	23.9	28.9	41.4	46.4	54.2	56.7
KPM 25 P	25	2.42	3.00	4.72	7.50	10.5	12.9	15.8	21.3	24.8	27.7	31.5	38.0	54.5	61.0	71.3	74.7
KPM 32 P	32	3.09	3.84	6.04	9.60	13.5	16.5	20.2	27.3	31.7	35.5	40.3	48.7	69.7	78.1	91.3	95.6
KPM 38 P	38	3.68	4.56	7.17	11.4	16.0	19.6	24.0	32.4	37.6	42.2	47.9	57.8	82.8	92.7	108	113
KPM 43 P	43	4.16	5.16	8.11	12.9	18.1	22.2	27.1	36.6	42.6	47.7	54.2	65.4	93.7	105	123	128
KPM 50 P	50	4.84	6.00	9.43	15.0	21.0	25.8	31.5	42.6	49.5	55.5	63.0	76.1	109	122	143	149
KPM 54 P	54	5.22	6.48	10.2	16.2	22.7	27.9	34.0	46.0	53.5	59.9	68.0	82.2	118	132	154	161
KPM 60 P	60	5.80	7.20	11.3	18.0	25.2	31.0	37.8	51.0	59.4	66.5	75.6	91.3	131	146	171	179
KPM 64 P	64	6.19	7.68	12.1	19.2	26.9	33.0	40.3	54.4	63.3	70.9	80.6	97.4	140	156	182	191
KPM 70 P	70	6.77	8.40	13.2	21.0	29.5	36.1	44.1	59.5	69.3	77.6	88.2	106	153	171	200	209
KPM 75 P	75	7.25	9.00	14.1	22.5	31.6	38.7	47.3	63.8	74.2	83.1	94.5	114	164	183	214	224
KPM 80 P	80	7.74	9.60	15.1	24.0	33.7	41.3	50.4	68.0	79.2	88.7	101	122	175	195	228	239
KPM 90 P	90	8.70	10.8	17.0	27.0	37.9	46.4	56.7	76.5	89.1	99.7	113	137	196	220	257	269
KPM 95 P	95	9.19	11.4	17.9	28.5	40.0	49.0	59.9	80.8	94.0	105	120	145	207	232	271	283
KPM 105 P	105	10.2	12.6	19.8	31.5	44.2	54.2	66.2	89.3	104	116	132	160	229	256	299	313
KPM 112 P	112	10.8	13.4	21.1	33.6	47.1	57.8	70.6	95.2	111	124	141	170	244	273	319	334
KPM 120 P	120	11.6	14.4	22.6	36.0	50.5	61.9	75.6	102	119	133	151	183	262	293	342	358
KPM 128 P	128	12.4	15.4	24.1	38.4	53.9	66.0	80.6	109	127	142	161	195	279	312	365	382
KPM 136 P	136	13.2	16.3	25.6	40.8	57.2	70.2	85.7	116	135	151	171	207	297	332	388	406
KPM 150 P	150	14.5	18.0	28.3	45.0	63.1	77.4	94.5	128	148	166	189	228	327	366	428	448
KPM 158 P	158	15.3	19.0	29.8	47.4	66.5	81.5	99.5	134	156	175	199	240	345	386	450	471
KPM 164 P	164	15.9	19.7	30.9	49.2	69.0	84.6	103	139	162	182	207	249	358	400	468	489
KPM 170 P	170	16.4	20.4	32.0	51.1	71.4	87.4	107	143	167	184	209	250	351	389	449	466
KPM 180 P	180	17.4	21.6	33.9	54.1	75.6	92.5	113	151	177	195	221	265	371	412	475	493
KPM 188 P	188	18.2	22.6	35.4	56.5	79.0	96.6	118	158	184	203	231	277	388	431	496	515
KPM 200 P	200	19.3	24.0	37.7	60.2	84.0	103	126	168	196	216	246	294	412	458	528	548
KPM 212 P	212	20.5	25.5	39.9	63.8	89.0	109	134	178	208	229	261	312	437	485	560	581
KPM 220 P	220	21.3	26.4	41.4	66.2	92.4	113	139	184	216	238	271	324	454	504	581	603
KPM 235 P	235	22.7	28.2	44.3	70.7	98.7	121	148	197	231	254	289	346	485	538	620	644
KPM 250 P	250	24.2	30.0	47.1	75.2	105	128	157	210	245	270	308	368	515	573	660	685
KPM 260 P	260	25.1	31.2	49.0	78.2	109	134	164	218	255	281	320	383	536	595	686	713
KPM 270 P	270	26.1	32.4	50.9	81.2	113	139	170	226	265	292	332	397	557	618	713	740
KPM 280 P	280	27.1	33.6	52.7	84.2	118	144	176	235	275	303	344	412	577	641	739	767
KPM 300 P	300	29.0	36.0	56.5	90.2	126	154	189	252	294	324	369	442	619	687	792	822
KPM 320 P	320	30.9	38.4	60.3	96.2	134	164	202	268	314	346	394	471	660	733	845	877
KPM 330 P	330	31.9	39.6	62.2	99.3	139	170	208	277	324	357	406	486	680	756	871	904
KPM 345 P	345	33.4	41.4	65.0	104	145	177	217	289	338	373	424	508	711	790	911	945
KPM 354 P	354	34.2	42.5	66.7	106	149	182	223	297	347	383	436	521	730	811	935	970
KPM 370 P	370	35.8	44.4	69.7	111	155	190	233	310	363	400	455	545	763	847	977	1014
KPM 395 P	395	38.2	47.4	74.4	119	166	203	249	331	387	427	486	581	814	905	1043	1083

Performance data of KPM range in Amperes

After fully charged with constant current charging at +20°C ±5°C (+68°F ± 9°F)

Final Cell Voltage: 1.10 V

Cell Type	C_5 Ah	Hours							Minutes					Seconds			
		10	8	5	3	2	1.5	1	30	20	15	10	5	60	30	5	1
KPM 10 P	10	0.99	1.23	1.95	3.16	4.47	5.65	7.30	9.90	11.7	12.9	14.7	17.8	25.2	28.5	33.7	37.0
KPM 13 P	13	1.29	1.60	2.54	4.11	5.81	7.34	9.49	12.9	15.2	16.8	19.1	23.1	32.8	37.1	43.8	48.2
KPM 19 P	19	1.89	2.34	3.71	6.00	8.48	10.7	13.9	18.8	22.2	24.5	27.9	33.8	47.9	54.2	64.0	70.4
KPM 25 P	25	2.49	3.08	4.88	7.90	11.2	14.1	18.2	24.8	29.2	32.3	36.7	44.5	63.0	71.3	84.2	92.6
KPM 32 P	32	3.18	3.95	6.25	10.1	14.3	18.1	23.4	31.7	37.4	41.3	47.0	56.9	80.7	91.3	108	119
KPM 38 P	38	3.78	4.68	7.42	12.0	17.0	21.5	27.7	37.6	44.4	49.0	55.8	67.6	95.8	108	128	141
KPM 43 P	43	4.27	5.30	8.39	13.6	19.2	24.3	31.4	42.6	50.3	55.5	63.2	76.5	108	123	145	159
KPM 50 P	50	4.97	6.16	9.76	15.8	22.3	28.2	36.5	49.5	58.5	64.5	73.5	88.9	126	143	168	185
KPM 54 P	54	5.37	6.66	10.5	17.1	24.1	30.5	39.4	53.5	63.1	69.7	79.3	96.0	136	154	182	200
KPM 60 P	60	5.95	7.39	11.7	19.0	26.8	33.9	43.7	62.3	70.2	77.4	88.2	107	151	171	202	222
KPM 64 P	64	6.34	7.88	12.5	20.2	28.6	36.2	46.7	66.5	74.9	82.5	94.0	114	161	182	216	237
KPM 70 P	70	6.94	8.62	13.7	22.1	31.2	39.6	51.0	72.7	81.9	90.3	103	125	176	200	236	259
KPM 75 P	75	7.43	9.23	14.7	23.7	33.5	42.4	54.7	77.9	87.7	96.7	110	134	189	214	253	278
KPM 80 P	80	7.93	9.85	15.6	25.3	35.7	45.2	58.3	83.1	93.6	103	118	142	202	228	270	296
KPM 90 P	90	8.92	11.1	17.6	28.4	40.2	50.9	65.6	93.5	105	116	132	160	227	257	303	333
KPM 95 P	95	9.42	11.7	18.6	30.0	42.4	53.7	69.3	98.7	111	123	140	169	239	271	320	352
KPM 105 P	105	10.4	12.9	20.5	33.2	46.8	59.3	76.5	109	123	135	154	187	265	299	354	389
KPM 112 P	112	11.1	13.8	21.9	35.4	50.0	63.3	81.6	116	131	144	165	199	282	319	378	415
KPM 120 P	120	11.9	14.8	23.5	37.9	53.5	67.8	87.5	125	140	155	176	214	302	342	405	445
KPM 128 P	128	12.7	15.8	25.0	40.4	57.1	72.3	93.3	133	150	165	188	228	322	365	432	474
KPM 136 P	136	13.5	16.7	26.6	43.0	60.7	76.8	99.1	141	159	175	200	242	343	388	459	504
KPM 150 P	150	14.9	18.5	29.3	47.4	66.9	84.8	109	156	175	193	220	267	378	428	506	556
KPM 158 P	158	15.7	19.5	30.9	49.9	70.5	89.3	115	164	185	204	232	281	398	450	533	585
KPM 164 P	164	16.3	20.2	32.0	51.8	73.2	92.7	120	170	192	211	241	292	413	468	553	608
KPM 170 P	170	16.8	20.9	33.1	53.6	75.9	95.9	125	167	196	214	245	292	408	455	537	569
KPM 180 P	180	17.8	22.2	35.1	56.7	80.4	102	132	177	207	227	259	310	432	482	569	603
KPM 188 P	188	18.6	23.2	36.7	59.3	83.9	106	138	185	216	237	271	323	451	503	594	629
KPM 200 P	200	19.8	24.6	39.0	63.0	89.3	113	147	197	230	252	288	344	479	535	632	670
KPM 212 P	212	21.0	26.1	41.3	66.8	94.7	120	155	209	244	267	305	365	508	568	670	710
KPM 220 P	220	21.8	27.1	42.9	69.4	98.2	124	161	217	253	277	317	378	527	589	695	736
KPM 235 P	235	23.3	28.9	45.8	74.1	105	133	172	231	270	296	338	404	563	629	743	787
KPM 250 P	250	24.8	30.8	48.7	78.8	112	141	183	246	288	315	360	430	599	669	790	837
KPM 260 P	260	25.8	32.0	50.7	82.0	116	147	191	256	299	328	374	447	623	696	822	870
KPM 270 P	270	26.8	33.3	52.6	85.1	121	152	198	266	311	340	389	464	647	723	853	904
KPM 280 P	280	27.8	34.5	54.6	88.3	125	158	205	276	322	353	403	482	671	750	885	937
KPM 300 P	300	29.7	37.0	58.5	94.6	134	169	220	295	345	378	432	516	719	803	948	1004
KPM 320 P	320	31.7	39.4	62.4	101	143	181	235	315	368	403	461	550	767	857	1011	1071
KPM 330 P	330	32.7	40.7	64.3	104	147	186	242	325	380	416	475	568	791	883	1043	1105
KPM 345 P	345	34.2	42.5	67.3	109	154	195	253	340	397	435	497	593	827	924	1090	1155
KPM 354 P	354	35.1	43.6	69.0	112	158	200	259	349	407	446	510	609	849	948	1119	1185
KPM 370 P	370	36.7	45.6	72.1	117	165	209	271	364	426	466	533	636	887	991	1169	1239
KPM 395 P	395	39.1	48.7	77.0	125	176	223	289	389	454	498	569	679	947	1058	1248	1322

Performance data of KPM range in Amperes

After fully charged with constant current charging at +20°C ±5°C (+68°F ± 9°F)

Final Cell Voltage: 1.05 V

Cell Type	C_5 Ah	Hours							Minutes					Seconds			
		10	8	5	3	2	1.5	1	30	20	15	10	5	60	30	5	1
KPM 10 P	10	1.01	1.25	1.98	3.23	4.67	6.00	8.19	11.6	13.5	14.9	17.2	20.9	29.6	33.4	40.4	43.2
KPM 13 P	13	1.31	1.63	2.58	4.20	6.07	7.80	10.6	15.1	17.6	19.4	22.3	27.2	38.5	43.4	52.5	56.1
KPM 19 P	19	1.91	2.38	3.76	6.14	8.87	11.4	15.6	22.0	25.7	28.3	32.6	39.7	56.2	63.5	76.8	82.0
KPM 25 P	25	2.52	3.13	4.95	8.08	11.7	15.0	20.5	29.0	33.8	37.3	42.9	52.3	74.0	83.5	101	108
KPM 32 P	32	3.22	4.01	6.34	10.3	14.9	19.2	26.2	37.1	43.3	47.7	54.9	66.9	94.7	107	129	138
KPM 38 P	38	3.83	4.76	7.53	12.3	17.7	22.8	31.1	44.1	51.4	56.6	65.2	79.4	112	127	154	164
KPM 43 P	43	4.33	5.38	8.52	13.9	20.1	25.8	35.2	49.9	58.1	64.1	73.8	89.9	127	144	174	186
KPM 50 P	50	5.04	6.26	9.91	16.2	23.3	30.0	41.0	58.0	67.6	74.5	85.9	105	148	167	202	216
KPM 54 P	54	5.44	6.76	10.7	17.4	25.2	32.4	44.2	62.6	73.0	80.5	92.7	113	160	180	218	233
KPM 60 P	60	6.05	7.51	11.9	19.4	28.1	35.9	49.1	69.5	81.0	89.4	103	125	178	201	242	259
KPM 64 P	64	6.46	8.01	12.7	20.7	29.9	38.3	52.4	74.1	86.4	95.4	110	134	189	214	259	276
KPM 70 P	70	7.06	8.76	13.9	22.6	32.8	41.9	57.3	81.1	94.5	104	120	146	207	234	283	302
KPM 75 P	75	7.57	9.39	14.9	24.3	35.1	44.9	61.4	86.9	101	112	129	157	222	251	303	324
KPM 80 P	80	8.07	10.0	15.9	25.9	37.4	47.8	65.5	92.6	108	119	137	167	237	267	323	346
KPM 90 P	90	9.08	11.3	17.9	29.1	42.1	53.8	73.7	104	122	134	155	188	266	301	364	389
KPM 95 P	95	9.59	11.9	18.9	30.7	44.5	56.8	77.8	110	128	142	163	198	281	318	384	410
KPM 105 P	105	10.6	13.1	20.8	34.0	49.1	62.8	85.9	122	142	156	180	219	311	351	424	453
KPM 112 P	112	11.3	14.0	22.2	36.2	52.4	67.0	91.7	130	151	167	192	234	331	374	453	484
KPM 120 P	120	12.1	15.0	23.8	38.8	56.1	71.8	98.2	139	162	179	206	251	355	401	485	518
KPM 128 P	128	12.9	16.0	25.4	41.4	59.9	76.6	105	148	173	191	220	267	379	428	517	553
KPM 136 P	136	13.7	17.0	27.0	44.0	63.6	81.3	111	157	184	203	234	284	402	455	549	587
KPM 150 P	150	15.1	18.8	29.8	48.5	70.2	89.7	123	174	203	224	258	313	444	502	606	648
KPM 158 P	158	15.9	19.8	31.4	51.1	73.9	94.5	129	183	213	235	272	330	468	528	638	682
KPM 164 P	164	16.5	20.5	32.5	53.0	76.7	98.1	134	190	221	244	282	343	485	548	663	708
KPM 170 P	170	17.2	21.3	33.7	54.9	79.5	102	139	196	228	251	285	343	476	536	632	680
KPM 180 P	180	18.2	22.5	35.7	58.2	84.2	108	148	207	241	266	302	363	504	567	669	720
KPM 188 P	188	19.0	23.5	37.2	60.8	88.0	113	154	216	252	278	315	379	526	592	699	752
KPM 200 P	200	20.2	25.0	39.6	64.6	93.6	120	164	230	268	296	335	404	560	630	744	800
KPM 212 P	212	21.4	26.5	42.0	68.5	99.2	127	174	244	284	313	356	428	593	668	788	848
KPM 220 P	220	22.2	27.5	43.6	71.1	103	132	180	253	295	325	369	444	616	693	818	880
KPM 235 P	235	23.7	29.4	46.6	75.9	110	141	193	270	315	347	394	474	658	740	874	940
KPM 250 P	250	25.2	31.3	49.5	80.8	117	150	205	288	335	370	419	504	700	788	930	1000
KPM 260 P	260	26.2	32.5	51.5	84.0	122	156	213	299	349	384	436	525	728	819	967	1040
KPM 270 P	270	27.2	33.8	53.5	87.3	126	162	221	311	362	399	453	545	756	851	1004	1080
KPM 280 P	280	28.3	35.0	55.5	90.5	131	168	230	322	376	414	470	565	784	882	1041	1120
KPM 300 P	300	30.3	37.5	59.4	97.0	140	180	246	345	402	443	503	605	840	945	1116	1200
KPM 320 P	320	32.3	40.0	63.4	103	150	192	262	368	429	473	537	646	896	1008	1190	1280
KPM 330 P	330	33.3	41.3	65.4	107	154	198	271	380	443	488	553	666	924	1040	1227	1320
KPM 345 P	345	34.8	43.2	68.4	111	161	207	283	397	463	510	579	696	966	1087	1283	1380
KPM 354 P	354	35.7	44.3	70.1	114	166	212	290	407	475	523	594	714	991	1115	1316	1416
KPM 370 P	370	37.3	46.3	73.3	120	173	222	303	426	496	547	621	747	1036	1166	1376	1480
KPM 395 P	395	39.9	49.4	78.3	128	185	237	324	454	530	584	663	797	1106	1244	1469	1580

Performance data of KPM range in Amperes

After fully charged with constant current charging at +20°C ±5°C (+68°F ± 9°F)

Final Cell Voltage: 1.00 V

Cell Type	C_5 Ah	Hours							Minutes					Seconds			
		10	8	5	3	2	1.5	1	30	20	15	10	5	60	30	5	1
KPM 10 P	10	1.02	1.26	2.00	3.27	4.79	6.20	8.60	13.0	15.2	16.9	19.4	23.7	33.4	38.9	46.2	49.3
KPM 13 P	13	1.32	1.64	2.60	4.25	6.23	8.06	11.2	16.9	19.8	22.0	25.2	30.8	43.4	50.6	60.1	64.1
KPM 19 P	19	1.93	2.40	3.80	6.22	9.10	11.8	16.3	24.7	28.9	32.1	36.8	45.0	63.5	73.9	87.8	93.7
KPM 25 P	25	2.54	3.15	5.00	8.18	12.0	15.5	21.5	32.5	38.0	42.3	48.5	59.2	83.5	97.3	116	123
KPM 32 P	32	3.25	4.03	6.40	10.5	15.3	19.9	27.5	41.6	48.7	54.1	62.0	75.8	107	124	148	158
KPM 38 P	38	3.86	4.79	7.60	12.4	18.2	23.6	32.7	49.4	57.8	64.2	73.7	90.0	127	148	176	187
KPM 43 P	43	4.37	5.42	8.60	14.1	20.6	26.7	37.0	55.9	65.4	72.7	83.4	102	144	167	199	212
KPM 50 P	50	5.08	6.30	10.0	16.4	24.0	31.0	43.0	65.0	76.1	84.5	96.9	118	167	195	231	247
KPM 54 P	54	5.48	6.81	10.8	17.7	25.9	33.5	46.4	70.2	82.2	91.3	105	128	180	210	250	266
KPM 60 P	60	6.11	7.57	12.0	19.7	28.7	37.1	51.4	77.7	90.9	101	116	142	200	232	276	295
KPM 64 P	64	6.52	8.07	12.8	21.0	30.7	39.5	54.8	82.9	97.0	108	123	151	213	248	295	314
KPM 70 P	70	7.13	8.83	14.0	23.0	33.5	43.2	59.9	90.6	106	118	135	165	233	271	322	344
KPM 75 P	75	7.64	9.46	15.0	24.6	35.9	46.3	64.2	97.1	114	126	145	177	250	290	345	368
KPM 80 P	80	8.15	10.1	16.0	26.2	38.3	49.4	68.5	104	121	135	154	189	266	310	368	393
KPM 90 P	90	9.16	11.4	18.0	29.5	43.1	55.6	77.1	117	136	151	174	212	299	349	415	442
KPM 95 P	95	9.67	12.0	19.0	31.1	45.5	58.7	81.3	123	144	160	183	224	316	368	438	466
KPM 105 P	105	10.7	13.2	21.0	34.4	50.3	64.8	89.9	136	159	177	203	248	349	407	484	515
KPM 112 P	112	11.4	14.1	22.4	36.7	53.6	69.2	95.9	145	170	188	216	264	373	434	516	550
KPM 120 P	120	12.2	15.1	24.0	39.3	57.5	74.1	103	155	182	202	232	283	399	465	553	589
KPM 128 P	128	13.0	16.1	25.6	42.0	61.3	79.1	110	166	194	215	247	302	426	496	590	628
KPM 136 P	136	13.8	17.2	27.2	44.6	65.1	84.0	116	176	206	229	262	321	453	527	626	668
KPM 150 P	150	15.3	18.9	30.0	49.2	71.8	92.6	128	194	227	252	289	354	499	581	691	736
KPM 158 P	158	16.1	19.9	31.6	51.8	75.7	97.6	135	205	239	266	305	373	526	612	728	776
KPM 164 P	164	16.7	20.7	32.8	53.8	78.6	101	140	212	248	276	316	387	546	635	755	805
KPM 170 P	170	17.3	21.4	34.0	55.6	81.3	105	146	220	257	284	325	393	547	615	734	775
KPM 180 P	180	18.3	22.7	36.0	58.9	86.0	112	155	233	272	301	344	416	579	651	777	821
KPM 188 P	188	19.1	23.7	37.6	61.5	89.9	117	162	243	284	314	360	434	605	680	811	857
KPM 200 P	200	20.4	25.2	40.0	65.4	95.6	124	172	258	302	334	383	462	643	723	863	912
KPM 212 P	212	21.6	26.7	42.4	69.4	101	131	182	274	320	354	406	490	682	766	915	967
KPM 220 P	220	22.4	27.7	44.0	72.0	105	136	189	284	332	367	421	508	708	795	949	1003
KPM 235 P	235	23.9	29.6	47.0	76.9	112	146	202	304	355	393	450	543	756	850	1014	1072
KPM 250 P	250	25.5	31.5	50.0	81.8	120	155	215	323	377	418	478	577	804	904	1079	1140
KPM 260 P	260	26.5	32.8	52.0	85.1	124	161	224	336	392	434	498	601	837	940	1122	1186
KPM 270 P	270	27.5	34.0	54.0	88.3	129	167	232	349	408	451	517	624	869	976	1165	1231
KPM 280 P	280	28.5	35.3	56.0	91.6	134	174	241	362	423	468	536	647	901	1012	1208	1277
KPM 300 P	300	30.5	37.8	60.0	98.2	143	186	258	388	453	501	574	693	965	1085	1295	1368
KPM 320 P	320	32.6	40.3	64.0	105	153	198	275	413	483	535	612	739	1030	1157	1381	1459
KPM 330 P	330	33.6	41.6	66.0	108	158	205	284	426	498	551	631	762	1062	1193	1424	1505
KPM 345 P	345	35.1	43.5	69.0	113	165	214	297	446	521	576	660	797	1110	1247	1489	1573
KPM 354 P	354	36.0	44.6	70.8	116	169	219	304	457	534	591	677	818	1139	1280	1528	1614
KPM 370 P	370	37.7	46.6	74.0	121	177	229	318	478	558	618	708	855	1190	1338	1597	1687
KPM 395 P	395	40.2	49.8	79.0	129	189	245	340	510	596	660	756	912	1271	1428	1704	1801

Performance data of KPM range in Amperes

After long term float charge of fully charged cells at +20°C ±5°C (+68°F ± 9°F)

Final Cell Voltage: 1.14 V

Cell Type	C_5 Ah	Hours							Minutes					Seconds			
		10	8	5	3	2	1.5	1	30	20	15	10	5	60	30	5	1
KPM 10 P	10	0.97	1.20	1.88	2.89	3.73	4.30	4.86	6.00	6.80	7.37	8.29	10.4	14.7	16.5	19.2	19.8
KPM 13 P	13	1.26	1.56	2.45	3.75	4.85	5.59	6.31	7.80	8.84	9.58	10.8	13.5	19.1	21.4	24.9	25.8
KPM 19 P	19	1.84	2.28	3.57	5.48	7.08	8.17	9.23	11.4	12.9	14.0	15.8	19.7	27.9	31.3	36.4	37.7
KPM 25 P	25	2.42	3.00	4.70	7.22	9.32	10.7	12.1	15.0	17.0	18.4	20.7	26.0	36.7	41.2	47.9	49.5
KPM 32 P	32	3.09	3.84	6.02	9.24	11.9	13.8	15.5	19.2	21.7	23.6	26.5	33.3	46.9	52.7	61.3	63.4
KPM 38 P	38	3.68	4.56	7.15	11.0	14.2	16.3	18.5	22.8	25.8	28.0	31.5	39.5	55.7	62.6	72.8	75.3
KPM 43 P	43	4.16	5.16	8.09	12.4	16.0	18.5	20.9	25.8	29.2	31.7	35.6	44.7	63.1	70.8	82.4	85.2
KPM 50 P	50	4.84	6.00	9.40	14.4	18.6	21.5	24.3	30.0	34.0	36.8	41.4	52.0	73.3	82.3	95.8	99.1
KPM 54 P	54	5.22	6.48	10.2	15.6	20.1	23.2	26.2	32.4	36.7	39.8	44.8	56.1	79.2	88.9	103	107
KPM 60 P	60	5.80	7.20	11.3	17.4	22.8	24.6	30.6	38.3	42.8	46.8	52.1	62.4	88.0	98.7	115	120
KPM 64 P	64	6.19	7.68	12.0	18.5	24.3	26.3	32.7	40.8	45.7	50.0	55.6	66.6	93.9	105	123	128
KPM 70 P	70	6.77	8.40	13.2	20.3	26.6	28.7	35.7	44.6	50.0	54.7	60.8	72.8	103	115	134	140
KPM 75 P	75	7.25	9.00	14.1	21.7	28.5	30.8	38.3	47.8	53.6	58.6	65.2	78.0	110	123	144	150
KPM 80 P	80	7.74	9.60	15.0	23.2	30.3	32.8	40.8	51.0	57.1	62.5	69.5	83.2	117	132	153	160
KPM 90 P	90	8.70	10.8	16.9	26.1	34.1	36.9	45.9	57.4	64.3	70.3	78.2	93.6	132	148	173	180
KPM 95 P	95	9.19	11.4	17.9	27.5	36.0	39.0	48.5	60.6	67.8	74.2	82.6	98.8	139	156	182	190
KPM 105 P	105	10.2	12.6	19.7	30.4	39.8	43.1	53.6	67.0	75.0	82.0	91.3	109	154	173	201	210
KPM 112 P	112	10.8	13.4	21.1	32.4	42.5	46.0	57.2	71.4	80.0	87.4	97.3	116	164	184	215	224
KPM 120 P	120	11.6	14.4	22.6	34.7	45.5	49.2	61.2	76.5	85.7	93.7	104	125	176	197	230	240
KPM 128 P	128	12.4	15.4	24.1	37.1	48.6	52.5	65.3	81.6	91.4	99.9	111	133	188	211	245	256
KPM 136 P	136	13.2	16.3	25.6	39.4	51.6	55.8	69.4	86.7	97.1	106	118	141	200	224	261	272
KPM 150 P	150	14.5	18.0	28.2	43.4	56.9	61.5	76.5	95.7	107	117	130	156	220	247	288	300
KPM 158 P	158	15.3	19.0	29.7	45.7	59.9	64.8	80.6	101	113	123	137	164	232	260	303	316
KPM 164 P	164	15.9	19.7	30.8	47.5	62.2	67.3	83.7	105	117	128	143	171	241	270	314	328
KPM 170 P	170	16.4	20.4	32.0	49.2	64.4	75.3	86.8	107	120	130	146	182	255	282	326	336
KPM 180 P	180	17.4	21.6	33.9	52.1	68.2	79.7	91.9	113	128	137	155	193	270	299	345	356
KPM 188 P	188	18.2	22.6	35.4	54.4	71.3	83.2	96.0	118	133	143	161	201	281	312	361	372
KPM 200 P	200	19.3	24.0	37.7	57.9	75.8	88.5	102	126	142	152	172	214	299	332	384	395
KPM 212 P	212	20.5	25.4	39.9	61.4	80.3	93.8	108	134	150	162	182	227	317	352	407	419
KPM 220 P	220	21.3	26.4	41.4	63.7	83.4	97.4	112	139	156	168	189	236	329	365	422	435
KPM 235 P	235	22.7	28.2	44.3	68.0	89.1	104	120	148	166	179	202	252	352	390	451	465
KPM 250 P	250	24.2	30.0	47.1	72.4	94.8	111	128	158	177	191	215	268	374	415	480	494
KPM 260 P	260	25.1	31.2	49.0	75.3	98.5	115	133	164	184	198	223	279	389	431	499	514
KPM 270 P	270	26.1	32.4	50.9	78.2	102	120	138	170	191	206	232	289	404	448	518	534
KPM 280 P	280	27.1	33.6	52.7	81.1	106	124	143	176	198	213	240	300	419	465	537	554
KPM 300 P	300	29.0	36.0	56.5	86.9	114	133	153	189	213	229	258	321	449	498	575	593
KPM 320 P	320	30.9	38.4	60.3	92.6	121	142	163	202	227	244	275	343	479	531	614	633
KPM 330 P	330	31.9	39.6	62.2	95.5	125	146	168	208	234	252	283	354	494	547	633	652
KPM 345 P	345	33.4	41.4	65.0	99.9	131	153	176	217	244	263	296	370	517	572	662	682
KPM 354 P	354	34.2	42.5	66.7	102	134	157	181	223	251	270	304	379	530	587	679	700
KPM 370 P	370	35.8	44.4	69.7	107	140	164	189	233	262	282	318	396	554	614	710	731
KPM 395 P	395	38.2	47.4	74.4	114	150	175	202	249	280	301	339	423	591	655	758	781

Performance data of KPM range in Amperes

After long term float charge of fully charged cells at +20°C ±5°C (+68°F ± 9°F)

Final Cell Voltage: 1.10 V

Cell Type	C_5 Ah	Hours							Minutes					Seconds			
		10	8	5	3	2	1.5	1	30	20	15	10	5	60	30	5	1
KPM 10 P	10	0.99	1.23	1.95	3.12	4.25	5.08	6.08	7.52	8.94	9.36	10.7	13.1	18.9	21.4	25.8	27.4
KPM 13 P	13	1.29	1.60	2.54	4.05	5.52	6.61	7.91	9.78	11.6	12.2	14.0	17.0	24.6	27.8	33.5	35.7
KPM 19 P	19	1.89	2.34	3.71	5.93	8.07	9.66	11.6	14.3	17.0	17.8	20.4	24.9	35.9	40.6	48.9	52.1
KPM 25 P	25	2.49	3.08	4.88	7.80	10.6	12.7	15.2	18.8	22.3	23.4	26.9	32.7	47.3	53.5	64.4	68.6
KPM 32 P	32	3.18	3.95	6.25	9.98	13.6	16.3	19.5	24.1	28.6	29.9	34.4	41.9	60.5	68.4	82.4	87.8
KPM 38 P	38	3.78	4.68	7.42	11.9	16.1	19.3	23.1	28.6	34.0	35.6	40.8	49.7	71.9	81.3	97.9	104
KPM 43 P	43	4.27	5.30	8.39	13.4	18.3	21.9	26.2	32.3	38.4	40.2	46.2	56.3	81.3	92.0	111	118
KPM 50 P	50	4.97	6.16	9.76	15.6	21.2	25.4	30.4	37.6	44.7	46.8	53.7	65.4	94.6	107	129	137
KPM 54 P	54	5.37	6.66	10.5	16.8	22.9	27.5	32.9	40.6	48.3	50.5	58.0	70.7	102	115	139	148
KPM 60 P	60	5.95	7.39	11.7	18.1	25.7	31.2	38.1	47.5	57.1	59.8	68.3	82.8	117	132	157	181
KPM 64 P	64	6.34	7.88	12.5	19.3	27.4	33.3	40.6	50.7	60.9	63.7	72.8	88.3	125	141	168	193
KPM 70 P	70	6.94	8.62	13.7	21.1	30.0	36.4	44.4	55.4	66.6	69.7	79.6	96.6	137	154	183	211
KPM 75 P	75	7.43	9.23	14.7	22.6	32.1	39.0	47.6	59.4	71.4	74.7	85.3	103	146	165	196	226
KPM 80 P	80	7.93	9.85	15.6	24.1	34.3	41.6	50.8	63.3	76.1	79.7	91.0	110	156	176	209	242
KPM 90 P	90	8.92	11.1	17.6	27.1	38.5	46.8	57.1	71.2	85.6	89.6	102	124	176	198	236	272
KPM 95 P	95	9.42	11.7	18.6	28.6	40.7	49.4	60.3	75.2	90.4	94.6	108	131	185	209	249	287
KPM 105 P	105	10.4	12.9	20.5	31.6	45.0	54.6	66.6	83.1	99.9	105	119	145	205	231	275	317
KPM 112 P	112	11.1	13.8	21.9	33.7	48.0	58.2	71.1	88.7	107	112	127	154	219	246	293	338
KPM 120 P	120	11.9	14.8	23.5	36.1	51.4	62.4	76.1	95.0	114	120	137	166	234	264	314	362
KPM 128 P	128	12.7	15.8	25.0	38.5	54.8	66.5	81.2	101	122	127	146	177	250	282	335	386
KPM 136 P	136	13.5	16.7	26.6	40.9	58.2	70.7	86.3	108	129	135	155	188	265	299	356	411
KPM 150 P	150	14.9	18.5	29.3	45.1	64.2	78.0	95.2	119	143	149	171	207	293	330	393	453
KPM 158 P	158	15.7	19.5	30.9	47.6	67.7	82.1	100	125	150	157	180	218	308	348	414	477
KPM 164 P	164	16.3	20.2	32.0	49.4	70.2	85.3	104	130	156	163	187	226	320	361	429	495
KPM 170 P	170	16.8	20.9	33.1	53.6	73.0	88.2	108	133	159	165	189	226	316	352	415	441
KPM 180 P	180	17.8	22.2	35.1	56.7	77.3	93.4	115	141	168	175	200	240	334	373	440	467
KPM 188 P	188	18.6	23.2	36.7	59.2	80.7	97.6	120	148	176	183	209	250	349	389	459	488
KPM 200 P	200	19.8	24.6	39.0	63.0	85.9	104	128	157	187	195	222	266	371	414	489	519
KPM 212 P	212	21.0	26.1	41.3	66.8	91.0	110	135	166	198	206	235	282	394	439	518	550
KPM 220 P	220	21.8	27.1	42.9	69.3	94.5	114	140	173	206	214	244	293	408	455	537	571
KPM 235 P	235	23.3	28.9	45.8	74.0	101	122	150	184	220	229	261	313	436	487	574	610
KPM 250 P	250	24.8	30.8	48.7	78.8	107	130	159	196	234	243	278	333	464	518	611	649
KPM 260 P	260	25.8	32.0	50.7	81.9	112	135	166	204	243	253	289	346	483	538	635	675
KPM 270 P	270	26.8	33.3	52.6	85.1	116	140	172	212	253	263	300	360	501	559	660	701
KPM 280 P	280	27.8	34.5	54.6	88.2	120	145	179	220	262	272	311	373	520	580	684	727
KPM 300 P	300	29.7	37.0	58.5	94.5	129	156	191	235	281	292	333	400	557	621	733	778
KPM 320 P	320	31.7	39.4	62.4	101	137	166	204	251	299	311	355	426	594	663	782	830
KPM 330 P	330	32.7	40.7	64.3	104	142	171	210	259	309	321	367	440	613	683	806	856
KPM 345 P	345	34.2	42.5	67.3	109	148	179	220	271	323	336	383	459	640	714	843	895
KPM 354 P	354	35.1	43.6	69.0	112	152	184	226	278	331	344	393	471	657	733	865	919
KPM 370 P	370	36.7	45.6	72.1	117	159	192	236	290	346	360	411	493	687	766	904	960
KPM 395 P	395	39.1	48.7	77.0	124	170	205	252	310	370	384	439	526	733	818	965	1025

Performance data of KPM range in Amperes

After long term float charge of fully charged cells at +20°C ±5°C (+68°F ± 9°F)

Final Cell Voltage: 1.05 V

Cell Type	C_5 Ah	Hours							Minutes					Seconds			
		10	8	5	3	2	1.5	1	30	20	15	10	5	60	30	5	1
KPM 10 P	10	1.01	1.25	1.98	3.22	4.67	5.76	7.31	9.26	10.8	11.8	13.0	15.4	22.3	25.5	30.8	33.3
KPM 13 P	13	1.31	1.63	2.58	4.18	6.07	7.48	9.51	12.0	14.0	15.4	16.9	20.0	29.0	33.2	40.0	43.3
KPM 19 P	19	1.91	2.38	3.76	6.12	8.87	10.9	13.9	17.6	20.5	22.4	24.7	29.2	42.4	48.5	58.5	63.2
KPM 25 P	25	2.52	3.13	4.95	8.05	11.7	14.4	18.3	23.2	27.0	29.5	32.6	38.4	55.8	63.8	76.9	83.2
KPM 32 P	32	3.22	4.01	6.34	10.3	14.9	18.4	23.4	29.6	34.6	37.8	41.7	49.2	71.4	81.6	98.5	106
KPM 38 P	38	3.83	4.76	7.53	12.2	17.7	21.9	27.8	35.2	41.1	44.9	49.5	58.4	84.8	96.9	117	126
KPM 43 P	43	4.33	5.38	8.52	13.8	20.1	24.7	31.4	39.8	46.5	50.8	56.0	66.1	95.9	110	132	143
KPM 50 P	50	5.04	6.26	9.91	16.1	23.3	28.8	36.6	46.3	54.0	59.1	65.1	76.8	112	128	154	166
KPM 54 P	54	5.44	6.76	10.7	17.4	25.2	31.1	39.5	50.0	58.3	63.8	70.3	83.0	120	138	166	180
KPM 60 P	60	6.05	7.51	11.9	19.4	28.0	34.9	45.4	59.0	68.9	74.9	83.6	97.8	139	157	190	203
KPM 64 P	64	6.46	8.01	12.7	20.7	29.9	37.2	48.4	63.0	73.5	79.9	89.1	104	149	168	203	216
KPM 70 P	70	7.06	8.76	13.9	22.6	32.7	40.7	53.0	68.9	80.3	87.4	97.5	114	162	184	222	237
KPM 75 P	75	7.57	9.39	14.9	24.3	35.0	43.6	56.8	73.8	86.1	93.6	104	122	174	197	237	253
KPM 80 P	80	8.07	10.0	15.9	25.9	37.3	46.5	60.6	78.7	91.8	99.9	111	130	186	210	253	270
KPM 90 P	90	9.08	11.3	17.9	29.1	42.0	52.4	68.1	88.6	103	112	125	147	209	236	285	304
KPM 95 P	95	9.59	11.9	18.9	30.7	44.3	55.3	71.9	93.5	109	119	132	155	220	249	301	321
KPM 105 P	105	10.6	13.1	20.8	34.0	49.0	61.1	79.5	103	121	131	146	171	244	275	332	355
KPM 112 P	112	11.3	14.0	22.2	36.2	52.3	65.2	84.8	110	129	140	156	183	260	294	354	379
KPM 120 P	120	12.1	15.0	23.8	38.8	56.0	69.8	90.8	118	138	150	167	196	278	315	380	406
KPM 128 P	128	12.9	16.0	25.4	41.4	59.8	74.5	96.9	126	147	160	178	209	297	336	405	433
KPM 136 P	136	13.7	17.0	27.0	44.0	63.5	79.1	103	134	156	170	189	222	316	357	430	460
KPM 150 P	150	15.1	18.8	29.8	48.5	70.0	87.3	114	148	172	187	209	245	348	393	475	507
KPM 158 P	158	15.9	19.8	31.4	51.1	73.8	91.9	120	155	181	197	220	258	367	414	500	534
KPM 164 P	164	16.5	20.5	32.5	53.0	76.6	95.4	124	161	188	205	228	267	381	430	519	554
KPM 170 P	170	17.2	21.3	33.7	54.9	79.5	99.2	129	166	194	211	231	267	374	421	496	534
KPM 180 P	180	18.2	22.5	35.7	58.2	84.2	105	137	176	205	223	244	283	396	445	525	565
KPM 188 P	188	19.0	23.5	37.2	60.8	88.0	110	143	184	214	233	255	296	414	465	548	590
KPM 200 P	200	20.2	25.0	39.6	64.6	93.6	117	152	195	228	248	271	315	440	495	583	628
KPM 212 P	212	21.4	26.5	42.0	68.5	99.2	124	161	207	242	263	288	333	466	524	618	666
KPM 220 P	220	22.2	27.5	43.6	71.1	103	128	167	215	251	273	299	346	484	544	641	691
KPM 235 P	235	23.7	29.4	46.6	75.9	110	137	178	230	268	292	319	370	517	581	685	738
KPM 250 P	250	25.2	31.3	49.5	80.8	117	146	190	244	285	310	339	393	550	618	729	785
KPM 260 P	260	26.2	32.5	51.5	84.0	122	152	197	254	296	323	353	409	572	643	758	816
KPM 270 P	270	27.2	33.8	53.5	87.3	126	158	205	264	308	335	366	425	594	668	787	848
KPM 280 P	280	28.3	35.0	55.5	90.5	131	163	212	274	319	348	380	440	616	693	816	879
KPM 300 P	300	30.3	37.5	59.4	97.0	140	175	228	293	342	372	407	472	660	742	875	942
KPM 320 P	320	32.3	40.0	63.4	103	150	187	243	313	365	397	434	503	704	792	933	1005
KPM 330 P	330	33.3	41.3	65.4	107	154	193	250	322	376	410	448	519	726	816	962	1036
KPM 345 P	345	34.8	43.2	68.4	111	161	201	262	337	393	428	468	543	759	853	1006	1083
KPM 354 P	354	35.7	44.3	70.1	114	166	207	268	346	403	440	480	557	779	876	1032	1112
KPM 370 P	370	37.3	46.3	73.3	120	173	216	281	362	422	459	502	582	814	915	1079	1162
KPM 395 P	395	39.9	49.4	78.3	128	185	231	300	386	450	490	536	621	869	977	1152	1240

Performance data of KPM range in Amperes

After long term float charge of fully charged cells at +20°C ±5°C (+68°F ± 9°F)

Final Cell Voltage: 1.00 V

Cell Type	C_5 Ah	Hours							Minutes					Seconds			
		10	8	5	3	2	1.5	1	30	20	15	10	5	60	30	5	1
KPM 10 P	10	1.02	1.26	2.00	3.27	4.77	6.18	8.12	10.9	12.5	13.5	15.4	18.5	26.0	29.7	36.4	39.2
KPM 13 P	13	1.32	1.64	2.60	4.25	6.20	8.04	10.6	14.1	16.3	17.6	20.1	24.0	33.9	38.6	47.3	51.0
KPM 19 P	19	1.93	2.40	3.80	6.22	9.07	11.7	15.4	20.6	23.8	25.7	29.3	35.1	49.5	56.4	69.1	74.5
KPM 25 P	25	2.54	3.15	5.00	8.18	11.9	15.5	20.3	27.1	31.3	33.8	38.6	46.2	65.1	74.2	90.9	98.1
KPM 32 P	32	3.25	4.03	6.40	10.5	15.3	19.8	26.0	34.7	40.1	43.3	49.4	59.2	83.3	94.9	116	126
KPM 38 P	38	3.86	4.79	7.60	12.4	18.1	23.5	30.9	41.3	47.6	51.4	58.7	70.3	99.0	113	138	149
KPM 43 P	43	4.37	5.42	8.60	14.1	20.5	26.6	34.9	46.7	53.9	58.2	66.4	79.5	112	128	156	169
KPM 50 P	50	5.08	6.30	10.0	16.4	23.9	30.9	40.6	54.3	62.7	67.6	77.2	92.5	130	148	182	196
KPM 54 P	54	5.48	6.81	10.8	17.7	25.8	33.4	43.9	58.6	67.7	73.1	83.4	99.9	141	160	196	212
KPM 60 P	60	6.11	7.57	12.0	19.7	28.7	37.2	50.4	69.4	79.9	86.9	99.3	118	162	187	223	237
KPM 64 P	64	6.52	8.07	12.8	21.0	30.7	39.7	53.7	74.0	85.3	92.7	106	126	173	199	238	253
KPM 70 P	70	7.13	8.83	14.0	23.0	33.5	43.4	58.8	81.0	93.3	101	116	138	189	218	260	277
KPM 75 P	75	7.64	9.46	15.0	24.6	35.9	46.5	63.0	86.8	99.9	109	124	148	202	233	278	297
KPM 80 P	80	8.15	10.1	16.0	26.2	38.3	49.6	67.1	92.5	107	116	132	157	216	249	297	317
KPM 90 P	90	9.16	11.4	18.0	29.5	43.1	55.8	75.5	104	120	130	149	177	243	280	334	356
KPM 95 P	95	9.67	12.0	19.0	31.1	45.5	58.9	79.7	110	127	138	157	187	256	296	353	376
KPM 105 P	105	10.7	13.2	21.0	34.4	50.3	65.1	88.1	121	140	152	174	207	283	327	390	416
KPM 112 P	112	11.4	14.1	22.4	36.7	53.6	69.5	94.0	130	149	162	185	220	302	348	416	443
KPM 120 P	120	12.2	15.1	24.0	39.3	57.5	74.4	101	139	160	174	199	236	324	373	445	475
KPM 128 P	128	13.0	16.1	25.6	42.0	61.3	79.4	107	148	171	185	212	252	345	398	475	507
KPM 136 P	136	13.8	17.2	27.2	44.6	65.1	84.3	114	157	181	197	225	268	367	423	505	538
KPM 150 P	150	15.3	18.9	30.0	49.2	71.8	93.0	126	174	200	217	248	295	404	467	557	594
KPM 158 P	158	16.1	19.9	31.6	51.8	75.7	98.0	133	183	211	229	261	311	426	492	587	625
KPM 164 P	164	16.7	20.7	32.8	53.8	78.6	102	138	190	219	238	271	323	442	510	609	649
KPM 170 P	170	17.3	21.4	34.0	55.6	81.3	105	143	195	225	243	277	326	441	492	587	621
KPM 180 P	180	18.3	22.7	36.0	58.9	86.0	112	151	207	238	257	293	346	466	521	621	658
KPM 188 P	188	19.1	23.7	37.6	61.5	89.9	117	158	216	249	269	307	361	487	544	649	687
KPM 200 P	200	20.4	25.2	40.0	65.4	95.6	124	168	230	264	286	326	384	518	578	690	731
KPM 212 P	212	21.6	26.7	42.4	69.4	101	131	178	244	280	303	346	407	549	613	732	775
KPM 220 P	220	22.4	27.7	44.0	72.0	105	136	185	253	291	314	359	422	570	636	759	804
KPM 235 P	235	23.9	29.6	47.0	76.9	112	146	197	270	311	336	383	451	609	680	811	859
KPM 250 P	250	25.5	31.5	50.0	81.8	120	155	210	287	331	357	408	480	648	723	863	913
KPM 260 P	260	26.5	32.8	52.0	85.1	124	161	218	299	344	372	424	499	674	752	898	950
KPM 270 P	270	27.5	34.0	54.0	88.3	129	167	227	310	357	386	440	518	700	781	932	986
KPM 280 P	280	28.5	35.3	56.0	91.6	134	174	235	322	370	400	457	538	726	810	967	1023
KPM 300 P	300	30.5	37.8	60.0	98.2	143	186	252	345	397	429	489	576	777	868	1036	1096
KPM 320 P	320	32.6	40.3	64.0	105	153	198	268	368	423	457	522	614	829	926	1105	1169
KPM 330 P	330	33.6	41.6	66.0	108	158	205	277	379	436	472	538	634	855	955	1139	1206
KPM 345 P	345	35.1	43.5	69.0	113	165	214	289	397	456	493	563	662	894	998	1191	1260
KPM 354 P	354	36.0	44.6	70.8	116	169	219	297	407	468	506	577	680	917	1024	1222	1293
KPM 370 P	370	37.7	46.6	74.0	121	177	229	310	425	489	529	603	710	959	1070	1277	1352
KPM 395 P	395	40.2	49.8	79.0	129	189	245	331	454	522	564	644	758	1024	1143	1364	1443

L Range

Cell dimensions and weight details

Cell type	Capacity (C_5 Ah)	Cell dimensions in mm			Approx. weight per cell in kg	Cell connection bolt size	Container size reference	Approx. reserve electrolyte cc/cell
		Height	Width	Length				
KPL 11 P	11	229	86	46	1.40	M6	S1	100
KPL 17 P	17				1.60			
KPL 23 P	23	229	86	61	1.90	M6	S2	130
KPL 27 P	27	289	134	59	3.20	M10	S4	200
KPL 32 P	32				3.50			
KPL 36 P	36				3.80			
KPL 41 P	41				4.20			
KPL 45 P	45				4.30			
KPL 55 P	55				4.50			
KPL 60 P	60	374	134	59	5.00	M10	S4A	200
KPL 69 P	69				5.60			
KPL 75 P	75	374	134	74	5.90	M10	S5	420
KPL 80 P	80				6.10			
KPL 88 P	88				6.20			
KPL 92 P	92				6.30			
KPL 100 P	100				6.40			
KPL 115 P	115				6.60			
KPL 120 P	120				6.80			
KPL 135 P	135	391	134	101	9.50	2 x M10	S6	580
KPL 150 P	150				10.0			
KPL 160 P	160				10.4			
KPL 170 P	170				10.7			
KPL 180 P	180				11.0			
KPL 190 P	190	417	159	106	12.5	2 x M10	S7	740
KPL 210 P	210				12.8			
KPL 220 P	220				13.0			
KPL 235 P	235				13.5			
KPL 255 P	255				13.8			
KPL 270 P	270				14.0			
KPL 285 P	285				14.3			
KPL 300 P	300	417	159	138	18.0	2 x M10	S7A	960
KPL 310 P	310				18.4			
KPL 335 P	335				18.8			
KPL 355 P	355				19.2			
KPL 370 P	370	443	163	166	21.5	2 X M10	S8	1210
KPL 390 P	390				22.0			
KPL 410 P	410				22.4			
KPL 425 P	425				22.6			
KPL 445 P	445				22.9			
KPL 460 P	460				23.2			
KPL 480 P	480				23.5			

Performance data of KPL range in Amperes

After fully charged with constant current charging at +20°C ±5°C (+68°F ± 9°F)

Final Cell Voltage: 1.14 V

Cell Type	C_5 Ah	Hours							Minutes					Seconds			
		10	8	5	3	2	1.5	1	30	20	15	10	5	60	30	5	1
KPL 11 P	11	1.08	1.33	2.08	3.27	4.22	4.84	5.60	7.03	7.92	8.53	9.46	11.0	14.5	15.5	16.7	18.7
KPL 17 P	17	1.67	2.06	3.22	5.05	6.52	7.48	8.66	10.9	12.2	13.2	14.6	17.0	22.4	24.0	25.8	28.9
KPL 23 P	23	2.26	2.78	4.35	6.83	8.82	10.1	11.7	14.7	16.6	17.8	19.8	23.0	30.3	32.4	35.0	39.1
KPL 27 P	27	2.65	3.27	5.11	8.02	10.4	11.9	13.8	17.3	19.4	20.9	23.2	26.9	35.6	38.0	41.0	45.9
KPL 32 P	32	3.14	3.87	6.05	9.51	12.3	14.1	16.3	20.5	23.0	24.8	27.5	31.9	42.2	45.1	48.6	54.5
KPL 36 P	36	3.53	4.36	6.81	10.7	13.8	15.8	18.3	23.0	25.9	27.9	31.0	35.9	47.5	50.7	54.7	61.3
KPL 41 P	41	4.02	4.96	7.75	12.2	15.7	18.0	20.9	26.2	29.5	31.8	35.3	40.9	54.1	57.8	62.3	69.8
KPL 45 P	45	4.42	5.44	8.51	13.4	17.3	19.8	22.9	28.8	32.4	34.9	38.7	44.9	59.3	63.4	68.4	76.6
KPL 55 P	55	5.40	6.65	10.4	16.3	21.1	24.2	28.0	35.2	39.6	42.7	47.3	54.9	72.5	77.5	83.6	93.6
KPL 60 P	60	5.87	7.25	11.3	17.8	23.0	26.4	30.6	38.4	43.2	46.7	51.6	60.0	78.8	84.5	91.3	102
KPL 69 P	69	6.75	8.34	13.1	20.5	26.5	30.4	35.2	44.2	49.7	53.7	59.3	69.0	90.6	97.2	105	118
KPL 75 P	75	7.33	9.06	14.2	22.3	28.8	33.0	38.2	48.0	54.0	58.3	64.5	75.0	98.5	106	114	128
KPL 80 P	80	7.82	9.67	15.1	23.8	30.7	35.2	40.8	51.2	57.6	62.2	68.8	80.0	105	113	122	136
KPL 88 P	88	8.61	10.6	16.6	26.1	33.8	38.8	44.9	56.3	63.3	68.5	75.6	88.0	116	124	134	150
KPL 92 P	92	9.00	11.1	17.4	27.3	35.3	40.5	46.9	58.9	66.2	71.6	79.1	92.0	121	130	140	157
KPL 100 P	100	9.78	12.1	18.9	29.7	38.4	44.0	51.0	64.0	72.0	77.8	86.0	100	131	141	152	170
KPL 115 P	115	11.2	13.9	21.8	34.2	44.2	50.6	58.6	73.6	82.8	89.5	98.9	115	151	162	175	196
KPL 120 P	120	11.7	14.5	22.7	35.6	46.1	52.8	61.2	76.8	86.3	93.3	103	120	158	169	183	205
KPL 135 P	135	13.2	16.3	25.5	40.1	51.8	59.5	68.8	86.4	97.1	105	116	135	177	190	205	230
KPL 150 P	150	14.7	18.1	28.4	44.5	57.6	66.1	76.5	96.0	108	117	129	150	197	211	228	256
KPL 160 P	160	15.6	19.3	30.3	47.5	61.4	70.5	81.6	102	115	124	138	160	210	225	243	273
KPL 170 P	170	16.6	20.5	32.2	50.5	65.3	74.9	86.7	109	122	132	146	170	223	240	259	290
KPL 180 P	180	17.6	21.8	34.0	53.5	69.1	79.3	91.8	115	130	140	155	180	236	254	274	307
KPL 190 P	190	18.6	23.0	35.9	56.4	72.2	82.6	96.9	120	135	144	159	186	242	262	281	285
KPL 210 P	210	20.5	25.4	39.7	62.3	79.8	91.3	107	132	149	159	176	206	267	290	311	315
KPL 220 P	220	21.5	26.6	41.6	65.3	83.6	95.7	112	139	156	167	185	216	280	304	325	330
KPL 235 P	235	23.0	28.4	44.4	69.8	89.3	102	120	148	167	178	197	230	299	324	348	352
KPL 255 P	255	24.9	30.8	48.2	75.7	96.9	111	130	161	181	193	214	250	324	352	377	382
KPL 270 P	270	26.4	32.6	51.0	80.2	103	117	138	170	192	205	226	265	343	373	399	405
KPL 285 P	285	27.9	34.5	53.9	84.6	108	124	145	179	202	216	239	280	362	393	422	427
KPL 300 P	300	29.3	36.3	56.7	89.1	114	130	153	189	213	228	252	294	381	414	444	450
KPL 310 P	310	30.3	37.5	58.6	92.0	118	135	158	195	220	235	260	304	394	428	459	465
KPL 335 P	335	32.8	40.5	63.3	99.5	127	146	171	211	238	254	281	329	426	463	496	502
KPL 355 P	355	34.7	42.9	67.1	105	135	154	181	224	252	269	298	348	451	490	525	532
KPL 370 P	370	36.2	44.7	69.9	110	141	161	189	233	263	281	310	363	470	511	547	555
KPL 390 P	390	38.1	47.2	73.7	116	148	170	199	246	277	296	327	383	496	538	577	585
KPL 410 P	410	40.1	49.6	77.5	122	156	178	209	258	291	311	344	402	521	566	607	615
KPL 425 P	425	41.6	51.4	80.3	126	162	185	217	268	302	322	356	417	540	587	629	637
KPL 445 P	445	43.5	53.8	84.1	132	169	194	227	280	316	338	373	436	566	614	658	667
KPL 460 P	460	45.0	55.6	86.9	137	175	200	235	290	327	349	386	451	585	635	681	690
KPL 480 P	480	47.0	58.0	90.7	143	182	209	245	302	341	364	403	471	610	663	710	720

Performance data of KPL range in Amperes

After fully charged with constant current charging at +20°C ±5°C (+68°F ± 9°F)

Final Cell Voltage: 1.10 V

Cell Type	C_5 Ah	Hours							Minutes					Seconds			
		10	8	5	3	2	1.5	1	30	20	15	10	5	60	30	5	1
KPL 11 P	11	1.10	1.36	2.13	3.38	4.69	5.59	6.61	8.21	9.36	10.0	11.0	13.0	16.5	17.9	19.3	21.8
KPL 17 P	17	1.70	2.10	3.30	5.23	7.24	8.65	10.2	12.7	14.5	15.5	17.0	20.0	25.5	27.7	29.8	33.7
KPL 23 P	23	2.30	2.85	4.46	7.08	9.80	11.7	13.8	17.2	19.6	20.9	23.0	27.1	34.5	37.4	40.4	45.6
KPL 27 P	27	2.70	3.34	5.24	8.31	11.5	13.7	16.2	20.2	23.0	24.6	27.0	31.8	40.5	44.0	47.4	53.5
KPL 32 P	32	3.20	3.96	6.21	9.85	13.6	16.3	19.2	23.9	27.2	29.1	32.0	37.7	48.1	52.1	56.1	63.4
KPL 36 P	36	3.60	4.45	6.98	11.1	15.3	18.3	21.6	26.9	30.6	32.8	36.0	42.4	54.1	58.6	63.2	71.4
KPL 41 P	41	4.10	5.07	7.95	12.6	17.5	20.9	24.6	30.6	34.9	37.3	41.0	48.3	61.6	66.8	71.9	81.3
KPL 45 P	45	4.50	5.57	8.73	13.8	19.2	22.9	27.0	33.6	38.3	41.0	45.0	53.0	67.6	73.3	78.9	89.2
KPL 55 P	55	5.50	6.80	10.7	16.9	23.4	28.0	33.1	41.1	46.8	50.1	55.0	64.8	82.6	89.5	96.5	109
KPL 60 P	60	6.00	7.42	11.6	18.4	25.6	30.5	36.0	44.9	51.1	54.8	60.0	70.7	90.0	97.6	109	118
KPL 69 P	69	6.90	8.54	13.4	21.2	29.4	35.1	41.4	51.6	58.8	63.0	69.0	81.3	104	112	125	135
KPL 75 P	75	7.50	9.28	14.5	23.0	32.0	38.2	45.0	56.1	63.9	68.5	75.0	88.4	113	122	136	147
KPL 80 P	80	8.00	9.90	15.5	24.6	34.1	40.7	48.0	59.8	68.1	73.0	80.0	94.2	120	130	145	157
KPL 88 P	88	8.80	10.9	17.1	27.0	37.5	44.8	52.8	65.8	75.0	80.3	88.0	104	132	143	160	173
KPL 92 P	92	9.20	11.4	17.8	28.2	39.2	46.8	55.2	68.8	78.4	84.0	92.0	108	138	150	167	180
KPL 100 P	100	10.0	12.4	19.4	30.7	42.7	50.9	60.0	74.8	85.2	91.3	100	118	150	163	181	196
KPL 115 P	115	11.5	14.2	22.3	35.3	49.0	58.5	69.0	86.0	98.0	105	115	135	173	187	209	225
KPL 120 P	120	12.0	14.8	23.3	36.8	51.2	61.0	72.0	89.7	102	110	120	141	180	195	218	235
KPL 135 P	135	13.5	16.7	26.2	41.4	57.6	68.7	81.0	101	115	123	135	159	203	220	245	265
KPL 150 P	150	15.0	18.6	29.1	46.0	64.0	76.3	90.0	112	128	137	150	177	225	244	272	294
KPL 160 P	160	16.0	19.8	31.0	49.1	68.2	81.4	96.0	120	136	146	160	188	240	260	290	314
KPL 170 P	170	17.0	21.0	33.0	52.2	72.5	86.5	102	127	145	155	170	200	255	276	308	333
KPL 180 P	180	18.0	22.3	34.9	55.3	76.8	91.6	108	135	153	164	180	212	270	293	326	353
KPL 190 P	190	19.0	23.5	36.8	58.5	80.6	95.4	112	141	158	169	186	220	281	302	327	330
KPL 210 P	210	21.0	26.0	40.7	64.7	89.1	105	124	155	175	187	206	244	311	334	361	365
KPL 220 P	220	22.0	27.2	42.6	67.7	93.4	110	130	163	183	196	216	255	326	350	379	383
KPL 235 P	235	23.5	29.1	45.5	72.3	99.7	118	139	174	196	209	231	273	348	374	404	409
KPL 255 P	255	25.5	31.6	49.4	78.5	108	128	150	189	212	227	250	296	377	405	439	444
KPL 270 P	270	27.0	33.4	52.3	83.1	115	136	159	200	225	240	265	313	400	429	465	470
KPL 285 P	285	28.5	35.3	55.2	87.7	121	143	168	211	237	254	280	331	422	453	491	496
KPL 300 P	300	30.0	37.1	58.1	92.4	127	151	177	222	250	267	294	348	444	477	516	522
KPL 310 P	310	31.0	38.4	60.0	95.4	132	156	183	229	258	276	304	360	459	493	534	539
KPL 335 P	335	33.5	41.5	64.9	103	142	168	198	248	279	298	329	389	496	533	577	583
KPL 355 P	355	35.5	43.9	68.7	109	151	178	209	263	295	316	348	412	525	564	611	617
KPL 370 P	370	37.0	45.8	71.6	114	157	186	218	274	308	329	363	429	547	588	637	644
KPL 390 P	390	39.0	48.3	75.5	120	165	196	230	289	324	347	383	453	577	620	671	678
KPL 410 P	410	41.0	50.8	79.4	126	174	206	242	303	341	365	402	476	607	652	706	713
KPL 425 P	425	42.5	52.6	82.3	131	180	213	251	315	354	378	417	493	629	676	732	739
KPL 445 P	445	44.5	55.1	86.2	137	189	223	263	329	370	396	437	516	658	707	766	774
KPL 460 P	460	46.0	56.9	89.1	142	195	231	271	340	383	409	451	534	681	731	792	800
KPL 480 P	480	48.0	59.4	92.9	148	204	241	283	355	399	427	471	557	710	763	826	835

Performance data of KPL range in Amperes

After fully charged with constant current charging at +20°C ±5°C (+68°F ± 9°F)

Final Cell Voltage: 1.05 V

Cell Type	C_5 Ah	Hours							Minutes					Seconds			
		10	8	5	3	2	1.5	1	30	20	15	10	5	60	30	5	1
KPL 11 P	11	1.12	1.39	2.18	3.50	4.97	6.15	7.48	9.70	10.9	11.8	13.1	15.2	19.5	21.1	23.2	26.1
KPL 17 P	17	1.73	2.15	3.37	5.40	7.68	9.51	11.6	15.0	16.9	18.2	20.2	23.4	30.1	32.6	35.9	40.4
KPL 23 P	23	2.35	2.90	4.55	7.31	10.4	12.9	15.6	20.3	22.8	24.6	27.3	31.7	40.7	44.2	48.5	54.6
KPL 27 P	27	2.76	3.41	5.35	8.58	12.2	15.1	18.4	23.8	26.8	28.9	32.0	37.2	47.8	51.8	57.0	64.1
KPL 32 P	32	3.27	4.04	6.34	10.2	14.5	17.9	21.8	28.2	31.7	34.2	38.0	44.1	56.7	61.4	67.5	76.0
KPL 36 P	36	3.67	4.55	7.13	11.4	16.3	20.1	24.5	31.7	35.7	38.5	42.7	49.6	63.8	69.1	76.0	85.5
KPL 41 P	41	4.18	5.18	8.12	13.0	18.5	22.9	27.9	36.1	40.7	43.8	48.6	56.5	72.6	78.7	86.5	97.4
KPL 45 P	45	4.59	5.68	8.91	14.3	20.3	25.2	30.6	39.7	44.6	48.1	53.4	62.0	79.7	86.4	95.0	107
KPL 55 P	55	5.61	6.95	10.9	17.5	24.8	30.8	37.4	48.5	54.6	58.8	65.3	75.8	97.4	106	116	131
KPL 60 P	60	6.13	7.57	11.9	19.1	27.1	33.6	41.4	52.9	59.5	64.9	71.7	83.0	106	115	126	139
KPL 69 P	69	7.05	8.70	13.7	22.0	31.1	38.7	47.6	60.9	68.4	74.7	82.5	95.4	122	133	145	160
KPL 75 P	75	7.66	9.46	14.8	23.9	33.8	42.0	51.8	66.2	74.3	81.2	89.7	104	133	144	157	173
KPL 80 P	80	8.17	10.1	15.8	25.5	36.1	44.8	55.2	70.6	79.3	86.6	95.7	111	142	154	168	185
KPL 88 P	88	8.99	11.1	17.4	28.0	39.7	49.3	60.7	77.6	87.2	95.2	105	122	156	169	185	204
KPL 92 P	92	9.40	11.6	18.2	29.3	41.5	51.6	63.5	81.2	91.2	99.6	110	127	163	177	193	213
KPL 100 P	100	10.2	12.6	19.8	31.9	45.1	56.0	69.0	88.2	99.1	108	120	138	177	192	210	231
KPL 115 P	115	11.7	14.5	22.8	36.6	51.9	64.5	79.4	101	114	124	138	159	204	221	241	266
KPL 120 P	120	12.3	15.1	23.7	38.2	54.2	67.3	82.8	106	119	130	143	166	213	231	252	278
KPL 135 P	135	13.8	17.0	26.7	43.0	60.9	75.7	93.2	119	134	146	161	187	239	259	283	312
KPL 150 P	150	15.3	18.9	29.7	47.8	67.7	84.1	104	132	149	162	179	207	266	288	315	347
KPL 160 P	160	16.3	20.2	31.7	51.0	72.2	89.7	110	141	159	173	191	221	284	307	336	370
KPL 170 P	170	17.4	21.4	33.6	54.2	76.7	95.3	117	150	169	184	203	235	302	327	357	393
KPL 180 P	180	18.4	22.7	35.6	57.4	81.2	101	124	159	178	195	215	249	319	346	378	416
KPL 190 P	190	19.4	24.1	37.6	60.3	85.5	106	130	164	184	200	222	257	327	353	395	419
KPL 210 P	210	21.5	26.7	41.6	66.7	94.5	117	143	181	204	221	245	284	361	391	437	464
KPL 220 P	220	22.5	27.9	43.6	69.9	99.0	123	150	190	214	231	257	298	379	409	457	486
KPL 235 P	235	24.0	29.8	46.5	74.6	106	131	160	202	228	247	275	318	404	437	489	519
KPL 255 P	255	26.1	32.4	50.5	81.0	115	142	174	220	248	268	298	345	439	474	530	563
KPL 270 P	270	27.6	34.3	53.5	85.8	122	151	184	233	262	284	315	365	465	502	561	596
KPL 285 P	285	29.1	36.2	56.4	90.5	128	159	194	246	277	299	333	386	490	530	593	629
KPL 300 P	300	30.7	38.1	59.4	95.3	135	167	205	258	291	315	351	406	516	558	624	662
KPL 310 P	310	31.7	39.4	61.4	98.5	140	173	211	267	301	326	362	419	533	577	644	684
KPL 335 P	335	34.2	42.5	66.3	106	151	187	229	289	325	352	391	453	577	623	696	739
KPL 355 P	355	36.3	45.1	70.3	113	160	198	242	306	345	373	415	480	611	660	738	784
KPL 370 P	370	37.8	47.0	73.3	118	167	206	252	319	359	389	432	501	637	688	769	817
KPL 390 P	390	39.8	49.5	77.2	124	176	218	266	336	379	410	456	528	671	725	811	861
KPL 410 P	410	41.9	52.1	81.2	130	185	229	280	353	398	431	479	555	706	762	852	905
KPL 425 P	425	43.4	54.0	84.2	135	191	237	290	366	413	446	497	575	731	790	884	938
KPL 445 P	445	45.5	56.5	88.1	141	200	248	304	383	432	467	520	602	766	828	925	982
KPL 460 P	460	47.0	58.4	91.1	146	207	257	314	396	447	483	538	622	792	855	956	1015
KPL 480 P	480	49.0	60.9	95.1	152	216	268	327	414	466	504	561	649	826	893	998	1060

Performance data of KPL range in Amperes

After fully charged with constant current charging at +20°C ±5°C (+68°F ± 9°F)

Final Cell Voltage: 1.00 V

Cell Type	C_5 Ah	Hours							Minutes					Seconds			
		10	8	5	3	2	1.5	1	30	20	15	10	5	60	30	5	1
KPL 11 P	11	1.13	1.40	2.20	3.56	5.12	6.47	8.47	10.9	12.5	13.5	15.0	17.3	22.4	24.2	28.0	31.6
KPL 17 P	17	1.74	2.17	3.40	5.51	7.91	9.99	13.1	16.9	19.3	20.8	23.2	26.8	34.6	37.4	43.3	48.9
KPL 23 P	23	2.36	2.93	4.60	7.45	10.7	13.5	17.7	22.8	26.1	28.1	31.3	36.3	46.8	50.6	58.6	66.1
KPL 27 P	27	2.77	3.44	5.40	8.75	12.6	15.9	20.8	26.8	30.6	33.0	36.8	42.6	54.9	59.4	68.8	77.6
KPL 32 P	32	3.28	4.08	6.40	10.4	14.9	18.8	24.6	31.7	36.2	39.1	43.6	50.5	65.1	70.4	81.6	92.0
KPL 36 P	36	3.69	4.59	7.20	11.7	16.7	21.2	27.7	35.7	40.8	44.0	49.1	56.8	73.2	79.2	91.8	103
KPL 41 P	41	4.21	5.22	8.20	13.3	19.1	24.1	31.6	40.7	46.4	50.1	55.9	64.6	83.4	90.2	105	118
KPL 45 P	45	4.62	5.73	9.00	14.6	20.9	26.5	34.7	44.6	51.0	55.0	61.3	71.0	91.5	99.0	115	129
KPL 55 P	55	5.64	7.01	11.0	17.8	25.6	32.3	42.4	54.6	62.3	67.3	75.0	86.7	112	121	140	158
KPL 60 P	60	6.18	7.64	12.0	19.4	27.9	35.3	46.2	59.5	68.1	73.3	81.7	94.2	121	132	147	159
KPL 69 P	69	7.11	8.79	13.8	22.3	32.1	40.6	53.1	68.4	78.3	84.3	93.9	108	139	152	169	183
KPL 75 P	75	7.73	9.55	15.0	24.3	34.9	44.1	57.7	74.3	85.1	91.7	102	118	152	165	184	199
KPL 80 P	80	8.24	10.2	16.0	25.9	37.2	47.0	61.6	79.3	90.8	97.8	109	126	162	176	196	212
KPL 88 P	88	9.07	11.2	17.6	28.5	40.9	51.7	67.7	87.2	99.9	108	120	138	178	193	216	233
KPL 92 P	92	9.48	11.7	18.4	29.8	42.8	54.1	70.8	91.2	104	112	125	144	186	202	226	244
KPL 100 P	100	10.3	12.7	20.0	32.4	46.5	58.8	77.0	99.1	114	122	136	157	202	220	245	265
KPL 115 P	115	11.8	14.7	23.0	37.2	53.4	67.6	88.5	114	131	141	157	180	232	253	282	304
KPL 120 P	120	12.4	15.3	24.0	38.9	55.8	70.5	92.3	119	136	147	163	188	243	263	294	318
KPL 135 P	135	13.9	17.2	27.0	43.7	62.7	79.4	104	134	153	165	184	212	273	296	331	357
KPL 150 P	150	15.5	19.1	30.0	48.6	69.7	88.2	115	149	170	183	204	235	303	329	368	397
KPL 160 P	160	16.5	20.4	32.0	51.8	74.4	94.1	123	159	182	196	218	251	323	351	392	424
KPL 170 P	170	17.5	21.7	34.0	55.1	79.0	99.9	131	169	193	208	231	267	344	373	417	450
KPL 180 P	180	18.5	22.9	36.0	58.3	83.7	106	139	178	204	220	245	283	364	395	441	477
KPL 190 P	190	19.6	24.2	38.0	61.5	88.2	111	143	184	211	228	253	291	375	404	456	472
KPL 210 P	210	21.7	26.8	42.0	68.0	97.5	123	158	204	233	252	279	322	414	447	504	521
KPL 220 P	220	22.7	28.0	44.0	71.2	102	129	165	214	244	264	293	337	434	468	528	546
KPL 235 P	235	24.2	29.9	47.0	76.1	109	138	176	228	261	282	312	360	463	500	564	583
KPL 255 P	255	26.3	32.5	51.0	82.5	118	149	192	248	283	306	339	390	503	543	612	633
KPL 270 P	270	27.9	34.4	54.0	87.4	125	158	203	262	300	324	359	413	532	575	648	670
KPL 285 P	285	29.4	36.3	57.0	92.2	132	167	214	277	316	342	379	436	562	607	684	707
KPL 300 P	300	31.0	38.2	60.0	97.1	139	176	225	291	333	360	399	459	591	639	720	744
KPL 310 P	310	32.0	39.5	62.0	100	144	181	233	301	344	372	412	475	611	660	744	769
KPL 335 P	335	34.6	42.7	67.0	108	155	196	252	325	372	402	445	513	660	713	804	831
KPL 355 P	355	36.6	45.2	71.0	115	165	208	267	345	394	426	472	544	700	756	852	881
KPL 370 P	370	38.2	47.1	74.0	120	172	217	278	359	411	444	492	566	729	788	888	918
KPL 390 P	390	40.2	49.7	78.0	126	181	228	293	379	433	468	519	597	769	830	936	968
KPL 410 P	410	42.3	52.2	82.0	133	190	240	308	398	455	492	545	628	808	873	984	1017
KPL 425 P	425	43.9	54.1	85.0	138	197	249	319	413	472	510	565	651	838	905	1020	1055
KPL 445 P	445	45.9	56.7	89.0	144	207	260	334	432	494	534	592	681	877	947	1068	1104
KPL 460 P	460	47.5	58.6	92.0	149	213	269	345	447	511	552	612	704	907	979	1104	1142
KPL 480 P	480	49.5	61.1	96.0	155	223	281	361	466	533	576	638	735	946	1022	1152	1191

Performance data of KPL range in Amperes

After long term float charge of fully charged cells at +20°C ±5°C (+68°F ± 9°F)

Final Cell Voltage: 1.14 V

Cell Type	C_5 Ah	Hours							Minutes					Seconds			
		10	8	5	3	2	1.5	1	30	20	15	10	5	60	30	5	1
KPL 11 P	11	1.08	1.33	2.08	3.12	3.67	4.00	4.34	5.56	6.26	6.73	7.12	8.19	10.4	12.1	15.9	18.2
KPL 17 P	17	1.67	2.06	3.21	4.82	5.67	6.18	6.70	8.59	9.67	10.4	11.0	12.7	16.1	18.7	24.5	28.1
KPL 23 P	23	2.26	2.78	4.34	6.52	7.66	8.36	9.07	11.6	13.1	14.1	14.9	17.1	21.8	25.3	33.2	38.0
KPL 27 P	27	2.65	3.27	5.10	7.66	9.00	9.82	10.6	13.6	15.4	16.5	17.5	20.1	25.6	29.7	38.9	44.6
KPL 32 P	32	3.14	3.87	6.04	9.07	10.7	11.6	12.6	16.2	18.2	19.6	20.7	23.8	30.4	35.2	46.2	52.9
KPL 36 P	36	3.53	4.36	6.79	10.2	12.0	13.1	14.2	18.2	20.5	22.0	23.3	26.8	34.2	39.6	51.9	59.5
KPL 41 P	41	4.02	4.96	7.74	11.6	13.7	14.9	16.2	20.7	23.3	25.1	26.6	30.5	38.9	45.1	59.1	67.8
KPL 45 P	45	4.42	5.44	8.49	12.8	15.0	16.4	17.7	22.7	25.6	27.5	29.1	33.5	42.7	49.5	64.9	74.4
KPL 55 P	55	5.40	6.65	10.4	15.6	18.3	20.0	21.7	27.8	31.3	33.7	35.6	40.9	52.2	60.5	79.3	90.9
KPL 60 P	60	5.87	7.25	11.3	17.0	20.2	21.9	23.4	27.5	31.3	31.4	35.9	39.1	51.2	54.9	68.1	76.9
KPL 69 P	69	6.75	8.34	13.1	19.6	23.2	25.2	26.9	31.6	36.0	36.1	41.3	45.0	58.9	63.1	78.4	88.4
KPL 75 P	75	7.33	9.06	14.2	21.3	25.2	27.4	29.3	34.3	39.1	39.3	44.9	48.9	64.0	68.6	85.2	96.1
KPL 80 P	80	7.82	9.67	15.1	22.7	26.9	29.3	31.2	36.6	41.7	41.9	47.9	52.2	68.3	73.2	90.8	102
KPL 88 P	88	8.61	10.6	16.6	24.9	29.6	32.2	34.4	40.3	45.9	46.1	52.7	57.4	75.1	80.5	99.9	113
KPL 92 P	92	9.00	11.1	17.4	26.1	30.9	33.6	35.9	42.1	48.0	48.2	55.1	60.0	78.5	84.2	104	118
KPL 100 P	100	9.78	12.1	18.9	28.3	33.6	36.6	39.0	45.8	52.2	52.4	59.8	65.2	85.3	91.5	114	128
KPL 115 P	115	11.2	13.9	21.8	32.6	38.7	42.1	44.9	52.7	60.0	60.2	68.8	75.0	98.1	105	131	147
KPL 120 P	120	11.7	14.5	22.7	34.0	40.3	43.9	46.8	54.9	62.6	62.9	71.8	78.3	102	110	136	154
KPL 135 P	135	13.2	16.3	25.5	38.3	45.4	49.4	52.7	61.8	70.4	70.7	80.8	88.0	115	124	153	173
KPL 150 P	150	14.7	18.1	28.4	42.5	50.4	54.8	58.6	68.7	78.2	78.6	89.8	97.8	128	137	170	192
KPL 160 P	160	15.6	19.3	30.3	45.4	53.8	58.5	62.5	73.3	83.5	83.8	95.7	104	137	146	182	205
KPL 170 P	170	16.6	20.5	32.2	48.2	57.1	62.2	66.4	77.8	88.7	89.0	102	111	145	156	193	218
KPL 180 P	180	17.6	21.8	34.0	51.0	60.5	65.8	70.3	82.4	93.9	94.3	108	117	154	165	204	231
KPL 190 P	190	18.6	22.9	35.9	53.9	63.2	68.6	74.1	84.1	90.1	93.5	105	122	157	171	193	214
KPL 210 P	210	20.5	25.3	39.6	59.5	69.8	75.8	81.9	93.0	99.6	103	116	135	174	189	214	237
KPL 220 P	220	21.5	26.5	41.5	62.4	73.1	79.4	85.8	97.4	104.3	108	122	142	182	198	224	248
KPL 235 P	235	23.0	28.4	44.4	66.6	78.1	84.8	91.7	104	111	116	130	151	194	211	239	265
KPL 255 P	255	24.9	30.8	48.1	72.3	84.8	92.0	99.5	113	121	125	141	164	211	229	259	287
KPL 270 P	270	26.4	32.6	51.0	76.6	89.8	97.4	105	120	128	133	149	174	223	242	275	304
KPL 285 P	285	27.9	34.4	53.8	80.8	94.8	103	111	126	135	140	158	183	236	256	290	321
KPL 300 P	300	29.4	36.2	56.6	85.1	99.7	108	117	133	142	148	166	193	248	269	305	338
KPL 310 P	310	30.3	37.4	58.5	87.9	103	112	121	137	147	152	172	199	256	278	315	349
KPL 335 P	335	32.8	40.4	63.2	95.0	111	121	131	148	159	165	185	216	277	301	341	377
KPL 355 P	355	34.7	42.8	67.0	101	118	128	139	157	168	175	196	228	293	319	361	400
KPL 370 P	370	36.2	44.6	69.8	105	123	134	144	164	175	182	205	238	306	332	376	417
KPL 390 P	390	38.2	47.1	73.6	111	130	141	152	173	185	192	216	251	322	350	397	439
KPL 410 P	410	40.1	49.5	77.4	116	136	148	160	182	194	202	227	264	339	368	417	462
KPL 425 P	425	41.6	51.3	80.2	121	141	153	166	188	201	209	235	273	351	382	432	479
KPL 445 P	445	43.5	53.7	84.0	126	148	161	174	197	211	219	246	286	368	400	453	501
KPL 460 P	460	45.0	55.5	86.8	130	153	166	179	204	218	226	255	296	380	413	468	518
KPL 480 P	480	47.0	57.9	90.6	136	160	173	187	213	228	236	266	309	397	431	488	541

Performance data of KPL range in Amperes

After long term float charge of fully charged cells at +20°C ±5°C (+68°F ± 9°F)

Final Cell Voltage: 1.10 V

Cell Type	C_5 Ah	Hours							Minutes					Seconds			
		10	8	5	3	2	1.5	1	30	20	15	10	5	60	30	5	1
KPL 11 P	11	1.10	1.36	2.13	3.30	4.31	4.89	5.39	7.08	7.87	8.38	9.36	11.0	12.8	14.7	19.2	21.8
KPL 17 P	17	1.70	2.10	3.30	5.11	6.66	7.56	8.33	10.9	12.2	13.0	14.5	17.1	19.8	22.7	29.7	33.7
KPL 23 P	23	2.30	2.85	4.46	6.91	9.01	10.2	11.3	14.8	16.5	17.5	19.6	23.1	26.7	30.7	40.1	45.6
KPL 27 P	27	2.70	3.34	5.24	8.11	10.6	12.0	13.2	17.4	19.3	20.6	23.0	27.1	31.4	36.0	47.1	53.5
KPL 32 P	32	3.20	3.96	6.21	9.61	12.5	14.2	15.7	20.6	22.9	24.4	27.2	32.1	37.2	42.7	55.8	63.4
KPL 36 P	36	3.60	4.45	6.98	10.8	14.1	16.0	17.6	23.2	25.8	27.4	30.6	36.2	41.9	48.1	62.8	71.4
KPL 41 P	41	4.10	5.07	7.95	12.3	16.1	18.2	20.1	26.4	29.3	31.3	34.9	41.2	47.7	54.7	71.6	81.3
KPL 45 P	45	4.50	5.57	8.73	13.5	17.6	20.0	22.1	28.9	32.2	34.3	38.3	45.2	52.3	60.1	78.5	89.2
KPL 55 P	55	5.50	6.80	10.7	16.5	21.5	24.5	27.0	35.4	39.4	41.9	46.8	55.2	63.9	73.4	96.0	109
KPL 60 P	60	6.00	7.41	11.6	18.0	23.5	26.7	29.3	35.5	39.2	39.8	43.8	51.7	62.9	67.8	82.4	92.1
KPL 69 P	69	6.90	8.52	13.4	20.7	27.1	30.7	33.8	40.9	45.1	45.7	50.3	59.4	72.3	78.0	94.7	106
KPL 75 P	75	7.50	9.26	14.5	22.5	29.4	33.4	36.7	44.4	49.0	49.7	54.7	64.6	78.6	84.8	103	115
KPL 80 P	80	8.00	9.88	15.5	24.0	31.4	35.6	39.1	47.4	52.2	53.0	58.4	68.9	83.8	90.4	110	123
KPL 88 P	88	8.80	10.9	17.1	26.4	34.5	39.2	43.0	52.1	57.5	58.3	64.2	75.8	92.2	99.5	121	135
KPL 92 P	92	9.20	11.4	17.8	27.6	36.1	41.0	45.0	54.5	60.1	61.0	67.1	79.2	96.4	104	126	141
KPL 100 P	100	10.0	12.3	19.4	30.0	39.2	44.5	48.9	59.2	65.3	66.3	73.0	86.1	105	113	137	153
KPL 115 P	115	11.5	14.2	22.3	34.5	45.1	51.2	56.3	68.1	75.1	76.2	83.9	99.0	121	130	158	177
KPL 120 P	120	12.0	14.8	23.3	36.0	47.1	53.4	58.7	71.1	78.4	79.5	87.6	103	126	136	165	184
KPL 135 P	135	13.5	16.7	26.2	40.5	52.9	60.1	66.0	80.0	88.2	89.5	98.5	116	141	153	185	207
KPL 150 P	150	15.0	18.5	29.1	45.0	58.8	66.8	73.4	88.9	98.0	99.4	109	129	157	170	206	230
KPL 160 P	160	16.0	19.8	31.0	48.0	62.7	71.2	78.3	94.8	104	106	117	138	168	181	220	246
KPL 170 P	170	17.0	21.0	33.0	51.0	66.7	75.7	83.2	101	111	113	124	146	178	192	233	261
KPL 180 P	180	18.0	22.2	34.9	54.0	70.6	80.1	88.0	107	118	119	131	155	189	203	247	276
KPL 190 P	190	19.0	23.5	36.8	57.1	74.2	83.4	91.4	106	115	126	139	146	195	210	231	254
KPL 210 P	210	21.0	26.0	40.7	63.1	82.0	92.2	101	117	127	139	153	161	216	232	256	280
KPL 220 P	220	22.0	27.2	42.6	66.1	85.9	96.6	106	123	133	146	161	169	226	243	268	294
KPL 235 P	235	23.5	29.1	45.5	70.7	91.7	103	113	131	142	156	171	180	242	260	286	314
KPL 255 P	255	25.5	31.6	49.4	76.7	99.5	112	123	143	154	169	186	195	262	282	310	340
KPL 270 P	270	27.0	33.4	52.3	81.2	105	119	130	151	163	179	197	207	278	298	329	360
KPL 285 P	285	28.5	35.3	55.2	85.7	111	125	137	159	172	189	208	218	293	315	347	380
KPL 300 P	300	30.0	37.1	58.1	90.2	117	132	144	168	181	199	219	230	308	331	365	400
KPL 310 P	310	31.0	38.4	60.0	93.2	121	136	149	173	187	205	226	237	319	342	377	414
KPL 335 P	335	33.5	41.5	64.9	101	131	147	161	187	202	222	244	257	344	370	408	447
KPL 355 P	355	35.5	43.9	68.7	107	139	156	171	199	215	235	259	272	365	392	432	474
KPL 370 P	370	37.0	45.8	71.6	111	144	162	178	207	224	245	270	283	380	409	450	494
KPL 390 P	390	39.0	48.3	75.5	117	152	171	188	218	236	258	285	299	401	431	475	521
KPL 410 P	410	41.0	50.8	79.4	123	160	180	197	229	248	272	299	314	422	453	499	547
KPL 425 P	425	42.5	52.6	82.3	128	166	187	204	238	257	282	310	326	437	470	517	567
KPL 445 P	445	44.5	55.1	86.2	134	174	195	214	249	269	295	325	341	458	492	542	594
KPL 460 P	460	46.0	56.9	89.1	138	180	202	221	257	278	305	336	352	473	508	560	614
KPL 480 P	480	48.0	59.4	92.9	144	187	211	231	269	290	318	350	368	494	530	584	641

Performance data of KPL range in Amperes

After long term float charge of fully charged cells at +20°C ±5°C (+68°F ± 9°F)

Final Cell Voltage: 1.05 V

Cell Type	C_5 Ah	Hours							Minutes					Seconds			
		10	8	5	3	2	1.5	1	30	20	15	10	5	60	30	5	1
KPL 11 P	11	1.12	1.39	2.18	3.50	4.71	5.63	6.59	8.85	10.3	11.1	12.3	12.5	15.8	17.8	23.2	26.1
KPL 17 P	17	1.73	2.15	3.37	5.40	7.28	8.70	10.2	13.7	16.0	17.2	19.0	19.3	24.5	27.5	35.9	40.4
KPL 23 P	23	2.35	2.90	4.55	7.31	9.84	11.8	13.8	18.5	21.6	23.3	25.8	26.2	33.1	37.2	48.5	54.6
KPL 27 P	27	2.76	3.41	5.35	8.58	11.6	13.8	16.2	21.7	25.4	27.3	30.2	30.7	38.9	43.7	57.0	64.1
KPL 32 P	32	3.27	4.04	6.34	10.2	13.7	16.4	19.2	25.7	30.1	32.4	35.8	36.4	46.1	51.8	67.5	76.0
KPL 36 P	36	3.67	4.55	7.13	11.4	15.4	18.4	21.6	29.0	33.8	36.4	40.3	41.0	51.8	58.2	76.0	85.5
KPL 41 P	41	4.18	5.18	8.12	13.0	17.5	21.0	24.5	33.0	38.5	41.5	45.9	46.6	59.0	66.3	86.5	97.4
KPL 45 P	45	4.59	5.68	8.91	14.3	19.3	23.0	26.9	36.2	42.3	45.5	50.4	51.2	64.8	72.8	95.0	107
KPL 55 P	55	5.61	6.95	10.9	17.5	23.5	28.2	32.9	44.2	51.7	55.6	61.6	62.6	79.2	89.0	116	131
KPL 60 P	60	6.13	7.57	11.9	19.1	25.7	30.8	35.6	44.1	50.1	53.5	58.0	62.6	78.3	84.8	102	112
KPL 69 P	69	7.05	8.70	13.7	22.0	29.6	35.4	40.9	50.7	57.6	61.5	66.7	72.0	90.0	97.5	117	129
KPL 75 P	75	7.66	9.46	14.8	23.9	32.2	38.5	44.5	55.1	62.6	66.9	72.5	78.3	97.8	106	127	140
KPL 80 P	80	8.17	10.1	15.8	25.5	34.3	41.0	47.5	58.8	66.8	71.4	77.4	83.5	104	113	135	149
KPL 88 P	88	8.99	11.1	17.4	28.0	37.7	45.1	52.2	64.6	73.4	78.5	85.1	91.9	115	124	149	164
KPL 92 P	92	9.40	11.6	18.2	29.3	39.4	47.2	54.6	67.6	76.8	82.1	89.0	96.1	120	130	156	172
KPL 100 P	100	10.2	12.6	19.8	31.9	42.9	51.3	59.3	73.5	83.5	89.2	96.7	104	130	141	169	187
KPL 115 P	115	11.7	14.5	22.8	36.6	49.3	59.0	68.2	84.5	96.0	103	111	120	150	162	195	214
KPL 120 P	120	12.3	15.1	23.7	38.2	51.4	61.6	71.2	88.2	100	107	116	125	157	170	203	224
KPL 135 P	135	13.8	17.0	26.7	43.0	57.9	69.3	80.1	99.2	113	120	131	141	176	191	228	252
KPL 150 P	150	15.3	18.9	29.7	47.8	64.3	77.0	89.0	110	125	134	145	157	196	212	254	280
KPL 160 P	160	16.3	20.2	31.7	51.0	68.6	82.1	95.0	118	134	143	155	167	209	226	271	298
KPL 170 P	170	17.4	21.4	33.6	54.2	72.9	87.2	101	125	142	152	164	177	222	240	288	317
KPL 180 P	180	18.4	22.7	35.6	57.4	77.2	92.3	107	132	150	161	174	188	235	254	305	336
KPL 190 P	190	19.4	24.1	37.6	60.3	81.2	97.0	111	137	151	156	174	198	240	260	281	305
KPL 210 P	210	21.5	26.7	41.6	66.7	89.8	107	123	151	167	173	192	219	266	287	310	337
KPL 220 P	220	22.5	27.9	43.6	69.9	94.1	112	129	158	175	181	201	230	278	301	325	353
KPL 235 P	235	24.0	29.8	46.5	74.6	100	120	138	169	187	194	215	245	297	321	347	377
KPL 255 P	255	26.1	32.4	50.5	81.0	109	130	150	183	202	210	233	266	323	348	377	409
KPL 270 P	270	27.6	34.3	53.5	85.8	115	138	158	194	214	222	247	282	341	369	399	433
KPL 285 P	285	29.1	36.2	56.4	90.5	122	145	167	205	226	235	261	298	360	389	421	457
KPL 300 P	300	30.7	38.1	59.4	95.3	128	153	176	216	238	247	274	313	379	410	443	481
KPL 310 P	310	31.7	39.4	61.4	98.5	133	158	182	223	246	255	284	324	392	424	458	497
KPL 335 P	335	34.2	42.5	66.3	106	143	171	196	241	266	276	306	350	424	458	495	537
KPL 355 P	355	36.3	45.1	70.3	113	152	181	208	255	282	292	325	371	449	485	525	570
KPL 370 P	370	37.8	47.0	73.3	118	158	189	217	266	294	305	338	386	468	506	547	594
KPL 390 P	390	39.8	49.5	77.2	124	167	199	229	280	310	321	357	407	493	533	577	626
KPL 410 P	410	41.9	52.1	81.2	130	175	209	240	295	326	338	375	428	519	560	606	658
KPL 425 P	425	43.4	54.0	84.2	135	182	217	249	305	337	350	389	444	538	581	628	682
KPL 445 P	445	45.5	56.5	88.1	141	190	227	261	320	353	366	407	465	563	608	658	714
KPL 460 P	460	47.0	58.4	91.1	146	197	235	270	331	365	379	421	480	582	629	680	738
KPL 480 P	480	49.0	60.9	95.1	152	205	245	282	345	381	395	439	501	607	656	710	770

Performance data of KPL range in Amperes

After long term float charge of fully charged cells at +20°C ±5°C (+68°F ± 9°F)

Final Cell Voltage: 1.00 V

Cell Type	C_5 Ah	Hours							Minutes					Seconds			
		10	8	5	3	2	1.5	1	30	20	15	10	5	60	30	5	1
KPL 11 P	11	1.13	1.40	2.20	3.56	4.91	6.13	7.77	10.4	11.8	12.8	13.7	17.3	19.6	21.8	28.0	31.6
KPL 17 P	17	1.74	2.17	3.40	5.51	7.59	9.47	12.0	16.1	18.2	19.7	21.2	26.8	30.3	33.7	43.3	48.9
KPL 23 P	23	2.36	2.93	4.60	7.45	10.3	12.8	16.2	21.8	24.6	26.7	28.7	36.3	41.1	45.6	58.6	66.1
KPL 27 P	27	2.77	3.44	5.40	8.75	12.1	15.0	19.1	25.5	28.9	31.3	33.7	42.6	48.2	53.5	68.8	77.6
KPL 32 P	32	3.28	4.08	6.40	10.4	14.3	17.8	22.6	30.3	34.2	37.1	39.9	50.5	57.1	63.5	81.6	92.0
KPL 36 P	36	3.69	4.59	7.20	11.7	16.1	20.1	25.4	34.1	38.5	41.7	44.9	56.8	64.3	71.4	91.8	103
KPL 41 P	41	4.21	5.22	8.20	13.3	18.3	22.8	29.0	38.8	43.9	47.5	51.1	64.6	73.2	81.3	105	118
KPL 45 P	45	4.62	5.73	9.00	14.6	20.1	25.1	31.8	42.6	48.1	52.2	56.1	71.0	80.3	89.2	115	129
KPL 55 P	55	5.64	7.01	11.0	17.8	24.6	30.6	38.8	52.0	58.8	63.8	68.6	86.7	98.2	109	140	158
KPL 60 P	60	6.18	7.64	12.0	19.4	26.8	33.4	41.6	52.1	58.9	62.4	65.9	79.1	96.0	104	123	137
KPL 69 P	69	7.11	8.79	13.8	22.3	30.8	38.4	47.8	59.9	67.7	71.7	75.8	91.0	110	120	142	157
KPL 75 P	75	7.73	9.55	15.0	24.3	33.5	41.8	52.0	65.1	73.6	78.0	82.4	98.9	120	130	154	171
KPL 80 P	80	8.24	10.2	16.0	25.9	35.7	44.6	55.4	69.4	78.5	83.2	87.9	106	128	139	164	182
KPL 88 P	88	9.07	11.2	17.6	28.5	39.3	49.0	61.0	76.4	86.3	91.5	96.7	116	141	153	181	201
KPL 92 P	92	9.48	11.7	18.4	29.8	41.0	51.2	63.8	79.9	90.2	95.7	101	121	147	160	189	210
KPL 100 P	100	10.3	12.7	20.0	32.4	44.6	55.7	69.3	86.8	98.1	104	110	132	160	173	205	228
KPL 115 P	115	11.8	14.7	23.0	37.2	51.3	64.0	79.7	99.8	113	120	126	152	184	200	236	262
KPL 120 P	120	12.4	15.3	24.0	38.9	53.5	66.8	83.2	104	118	125	132	158	192	208	246	274
KPL 135 P	135	13.9	17.2	27.0	43.7	60.2	75.2	93.6	117	132	140	148	178	216	234	277	308
KPL 150 P	150	15.5	19.1	30.0	48.6	66.9	83.5	104	130	147	156	165	198	240	260	308	342
KPL 160 P	160	16.5	20.4	32.0	51.8	71.4	89.1	111	139	157	166	176	211	256	278	329	365
KPL 170 P	170	17.5	21.7	34.0	55.1	75.8	94.7	118	148	167	177	187	224	272	295	349	388
KPL 180 P	180	18.5	22.9	36.0	58.3	80.3	100	125	156	177	187	198	237	288	312	370	411
KPL 190 P	190	19.6	24.2	38.0	61.5	84.6	105	128	161	181	194	209	240	296	320	342	368
KPL 210 P	210	21.7	26.8	42.0	68.0	93.5	117	142	178	200	215	231	265	327	353	378	406
KPL 220 P	220	22.7	28.0	44.0	71.2	98.0	122	149	187	210	225	242	277	343	370	396	426
KPL 235 P	235	24.2	29.9	47.0	76.1	105	130	159	200	224	240	258	296	366	395	423	455
KPL 255 P	255	26.3	32.5	51.0	82.5	114	142	172	217	243	261	280	322	397	429	459	493
KPL 270 P	270	27.9	34.4	54.0	87.4	120	150	183	229	257	276	297	340	421	454	486	522
KPL 285 P	285	29.4	36.3	57.0	92.2	127	158	193	242	271	292	313	359	444	479	513	551
KPL 300 P	300	31.0	38.2	60.0	97.1	134	167	203	255	286	307	330	378	467	505	540	580
KPL 310 P	310	32.0	39.5	62.0	100	138	172	210	263	295	317	341	391	483	521	558	600
KPL 335 P	335	34.6	42.7	67.0	108	149	186	226	285	319	343	368	422	522	564	603	648
KPL 355 P	355	36.6	45.2	71.0	115	158	197	240	302	338	363	390	448	553	597	639	687
KPL 370 P	370	38.2	47.1	74.0	120	165	205	250	314	352	378	407	467	576	622	666	716
KPL 390 P	390	40.2	49.7	78.0	126	174	217	264	331	371	399	429	492	608	656	702	755
KPL 410 P	410	42.3	52.2	82.0	133	183	228	277	348	390	419	451	517	639	690	738	793
KPL 425 P	425	43.9	54.1	85.0	138	189	236	287	361	405	435	467	536	662	715	765	822
KPL 445 P	445	45.9	56.7	89.0	144	198	247	301	378	424	455	489	561	693	749	801	861
KPL 460 P	460	47.5	58.6	92.0	149	205	255	311	391	438	471	505	580	717	774	828	890
KPL 480 P	480	49.5	61.1	96.0	155	214	266	325	408	457	491	527	605	748	807	864	929

Battery Arrangement as per Standard Rack Designs

(NORMAL ARRANGEMENT)																
Container size reference	1TIER								2TIER							
	1STEP		2STEP		3STEP		4STEP		1STEP		2STEP		3STEP		4STEP	
	W	H	W	H	W	H	W	H	W	H	W	H	W	H	W	H
S1 & S2			222	668	323	783	424	898								
S3			318	678	467	793	616	908			318	1070	467	1300	616	1550
S4			318	728	467	843	616	958			318	1250	467	1450	616	1700
S4A			318	813	467	928	616	1043			318	1450	467	1670	616	1900
S5			318	813	467	928	616	1043			318	1450	467	1670	616	1900
S6			318	830	467	945	616	1060			318	1536	467	1786	616	2036
S7			376	856	554	971	732	1086			376	1624	554	1834	732	2074
S7A			376	856	554	971	732	1086			376	1624	554	1834	732	2074
S8			376	882	554	997	732	1112			376	1650	554	1860	732	2100

(All dimensions in mm. Height is including cells)

Evaluation of Rack Length

Normal Arrangement

Length of rack= (X + 1) x No. of cells in a row for S1 to S5 containers

= (X + 2) x No. of cells in a row for S6 to S8 containers

Where, X = Length of cell

The value of length should be rounded-off to nearest to 100 mm and 5 mm should be added to arrive at the final length of rack.

Standard Arrangement of Cells

KPH 10 - KPH 80
KPM 10 - KPM 120
KPL 11 - KPL 120

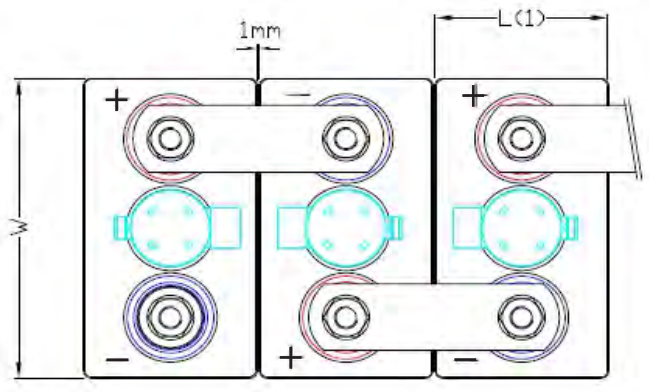

KPH 85 - KPH 265
KPM 128 - KPM 395
KPL 135 - KPL 480

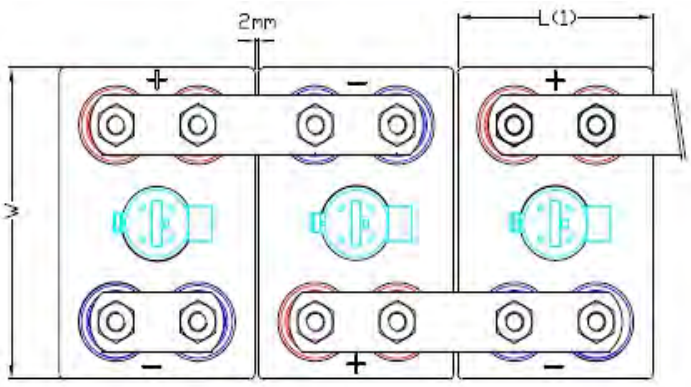

Battery Rack Arrangement

SINGLE TIER RACK
2STEP 1TIER RACK

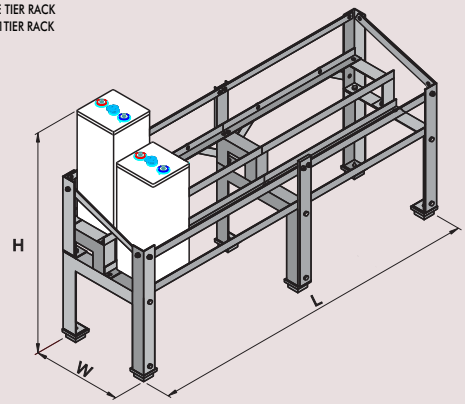

SINGLE TIER RACK
3STEP 1TIER RACKS

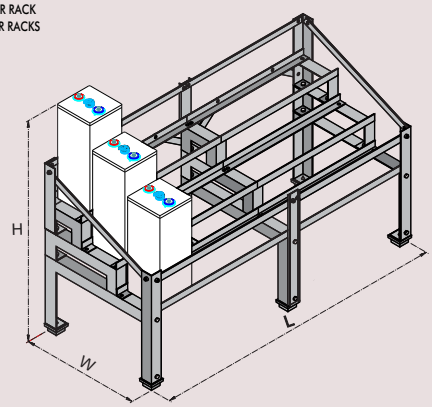

SINGLE TIER RACK
4STEP 1TIER RACK

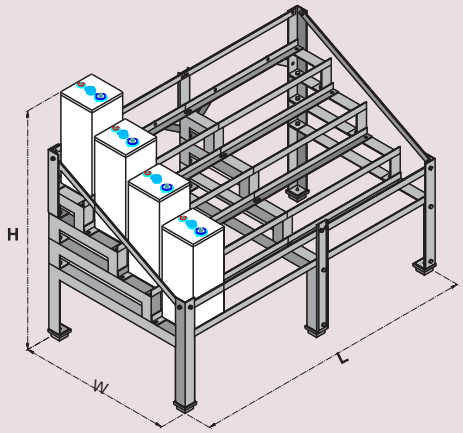

TWO TIER RACK
2STEP 2TIER RACK

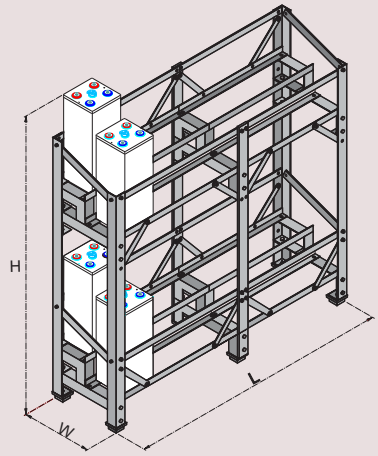

TWO TIER RACK
3STEP 2TIER RACK

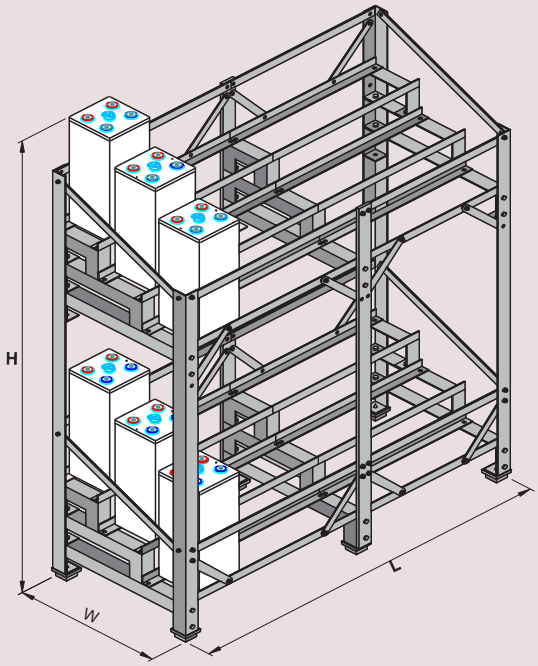

TWO TIER RACK
4STEP 2TIER RACK

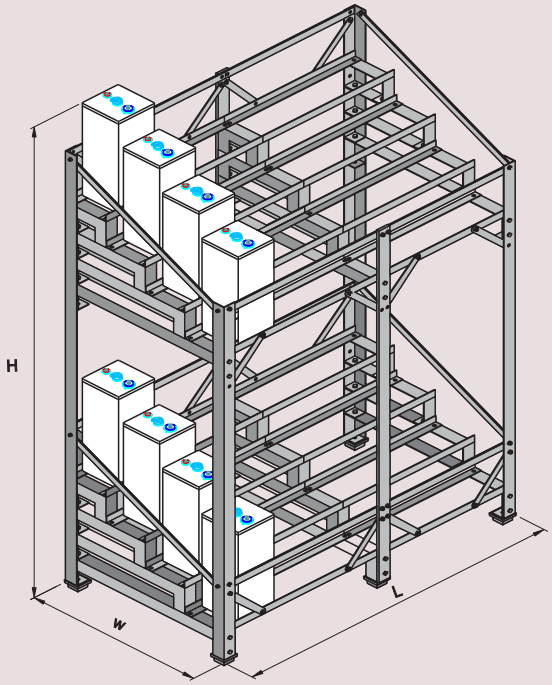

Typical Characteristics

KPH Charge

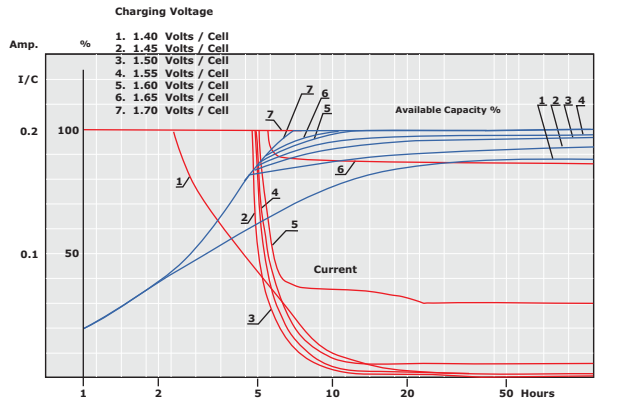

KPH Discharge

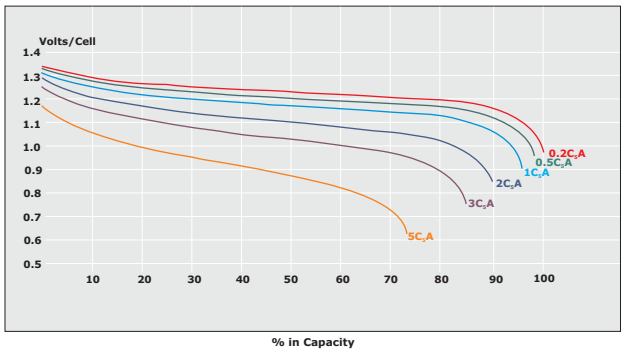

KPM Charge

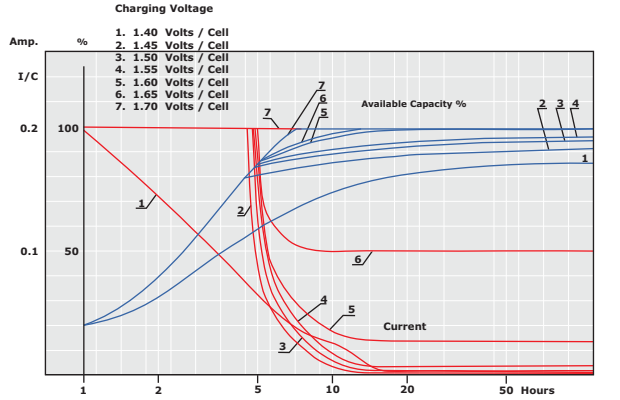

KPM Discharge

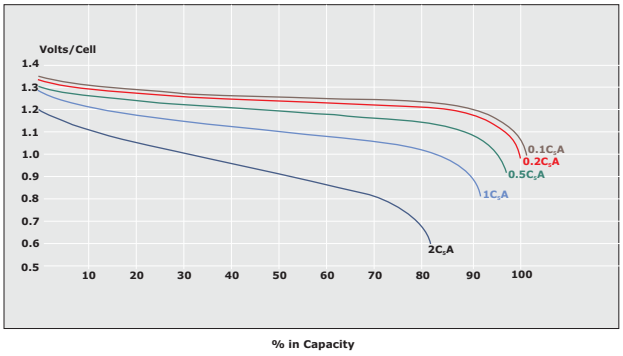

KPL Charge

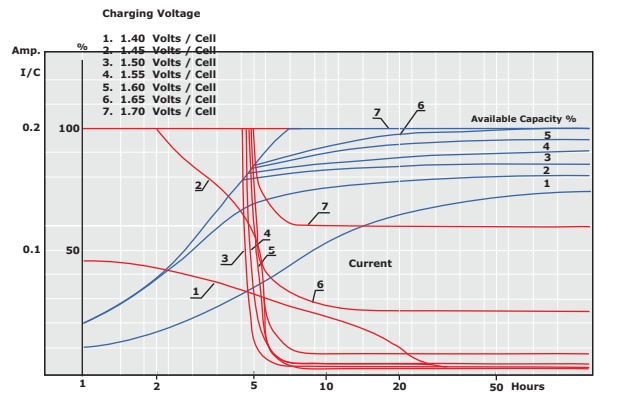

KPL Discharge

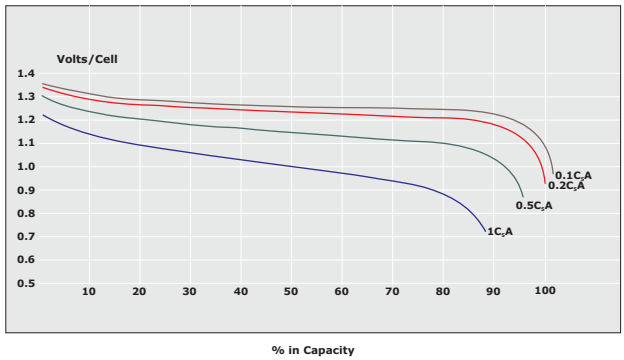

Certifications

DEKRA

IRIS Certification

BUREAU VERITAS Certification ISO 14001 — UKAS QUALITY MANAGEMENT

BUREAU VERITAS Certification ISO 9001 — UKAS QUALITY MANAGEMENT

BUREAU VERITAS Certification OHSAS 18001 — UKAS QUALITY MANAGEMENT

HBL Engineering Limited.

(formerly known as HBL Power Systems Limited)

Road No. 10, Banjara Hills,
Hyderabad 500034, TG, INDIA
E-mail:contact@hbl.in
www.hbl.in
EPR Number: 452686543742529144

HBL America Inc.

712, Brook Street
Rocky Hill, CT 06067
www.hblamericas.com
E-mail:contact@hblbatteries.com
+1 860 257 9800

Corp Comms /single cell Brochure / Aug. 2025